Manualslib.com - The Global Manuals Library

GROWATT HOPE 4.8L-C1 QUICK MANUAL

Table of Contents

Important Safety Information
Package Items
Protective Equipment
Installation Of Battery
Battery Orientation
Electrical Connection
Operation and Commissioning
Other ManualsLib Projects

SHENZHEN GROWATT NEW ENERGY CO.,LTD

Hope 4.8L-C1 Lithium Iron Phosphate Battery Residential Energy Storage System

Quick Guidance

Date: 2021-04-29

Read this Guidance carefully before installation to understand product features and safety precautions.

WARNING

* Operators should be well trained to fully understand grid-connected photovoltaic power system and national/regional standards.
* Installers must use insulating tools and wear safety equipment.
* Device damages caused by noncompliance with storage, transportation, installation and usage requirements specified in Quick Guidance and Manual are not covered by Warranty.

1 Important Safety Information

Risks of electrolyte leakage

* Do not subject battery to strong impact.
* Do not crush or puncture battery.
* Prevent battery from falling. In case of fall, turn off the battery immediately and stop using it.
* Do not open or mutilate batteries. Released electrolyte is harmful to the skin and eyes.

Risks of fire

* Do not expose battery to direct sunlight.
* Avoid contact with conductive objects such as wires.
* Keep battery away from fire source, inflammable, explosive and chemical materials.
* Do not dispose of batteries in a fire.

Risks of electric shock

* Do not touch battery with wet hands.
* Keep battery away from children and animals.
* A battery can present a risk of electric shock and burns by high short-circuited current.
* Battery installation and wire connection must be operated by professionals.

Risks of damage

* Keep a distance to water source.
* Do not subject battery to high voltage.
* Place battery on a flat surface. Do not place any foreign object on top of battery nor step on battery.
* Battery-connected power supply should have reinforced insulation.

2 Product Appearance

The battery is an energy storage unit composed of cells, mechanical parts, battery management system (BMS) as well as power and signal terminals.

Table 2-1 Mechanical features

Parameter	Value
Dimensions	W442*D479*H128 mm (excluding brackets and terminals)
Weight	≤ 45 kg
Installation	Rack-mounted installation/Stackable installation with brackets

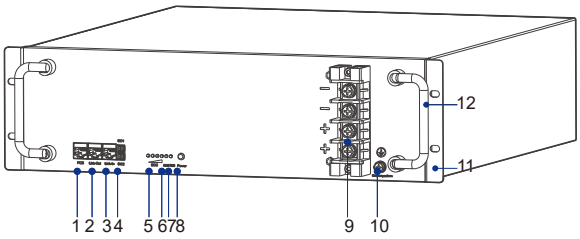

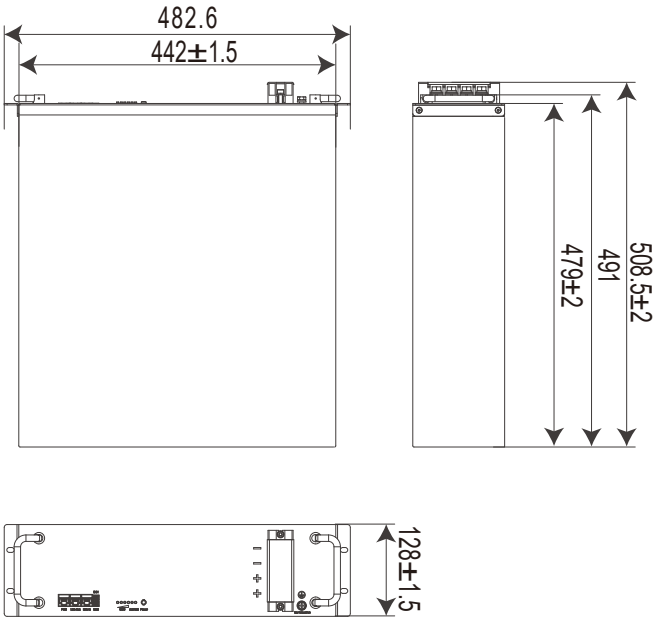

Table 2-2 Ports and terminals

No.	Label	Name
1	PCS	PCS communication port
2	Link-Out	Network port for parallel connection
3	Link-In	Network port for parallel connection
4	DO1 DO2	Two-channel dry contact port
5	SOC	Display the battery capacity, and each indicator represents 25% SOC
6	ALM	Display the alarm status of the battery
7	RUN	Display the running status of the battery
8	Power	Power ON/OFF button
9	+/-	Positive and negative power terminals
10	⏚	Grounding terminal
11	Rack mount bracket	19-inch rack mount bracket, adjustable
12	Handle	Fold-able handle

3 Package Items

Before installation, check carefully for any damages on the package and the products and inspect if all accessories in the list are included. If any part is missing or damaged, please contact your distributor.

Battery Package			**Hope 4.8L-C1 Kit package**		
Item NO.	Part Name	Quantity	Item NO.	Part Name	Quantity
1	Hope 4.8L-C1 Battery	1pcs	5	Battery Bracket	4pcs
2	Crystal plug	2pcs	6	Screw bolt	4pcs
3	Quick Guidance	1pcs	7	RNB-22-6 lug	4pcs
4	Warranty Card	1pcs	8	Screw	4pcs
			9	Power+ Cable	1pcs
			10	Power- Cable	1pcs
			11	Network Cable A	1pcs
			12	Network Cable B	1pcs

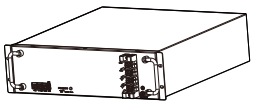

1

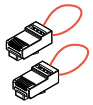

2

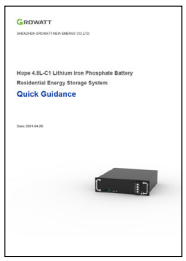

3

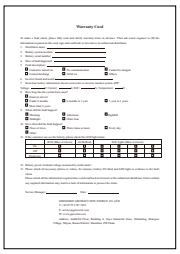

4

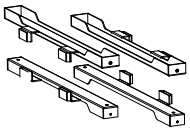

5

6

7

8

9

10

11

12

4 Tools and Protective Equipment

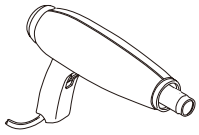

Heat gun

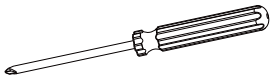

Cross-head screwdriver

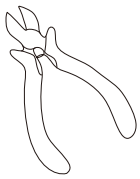

Wire cutter

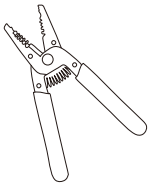

Wire stripper

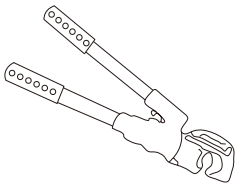

Hydraulic plier

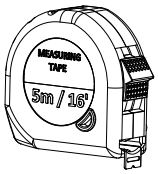

Tape measure

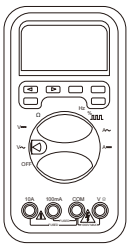

Multi-meter

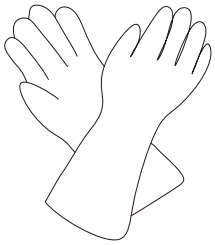

Insulated gloves

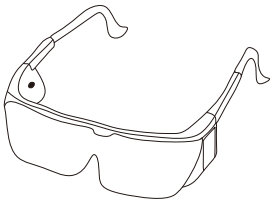

Safety goggles

Rubber boots

To prevent injury, always wear acid-resistant clothing, PVC gloves, goggles and rubber boots during installation and operation.

5 Installation of Battery

It is recommended to install the battery into a cabinet and place it indoor. If you install it outdoor, select a cabinet with a sufficient IP rating. Build sunshade & rain shelter to avoid direct exposure to sunlight and rain for outdoor application.

CAUTION

- Do NOT expose battery into sunshine or rain directly.
- Keep the dirt or dust at a minimal level.
- Do not install battery in a place where flood frequently occurs.
- Do not install battery in highly humid area.
- Ensure direct contact between battery shell and ambient air and do NOT cover or shield battery.

5.1 Battery Orientation

The battery supports stackable installation with brackets. At most 8 batteries can be athwart stacked. Ensure that you install the battery in correct directions. Please refer to figures below (√ means acceptable and X unacceptable).

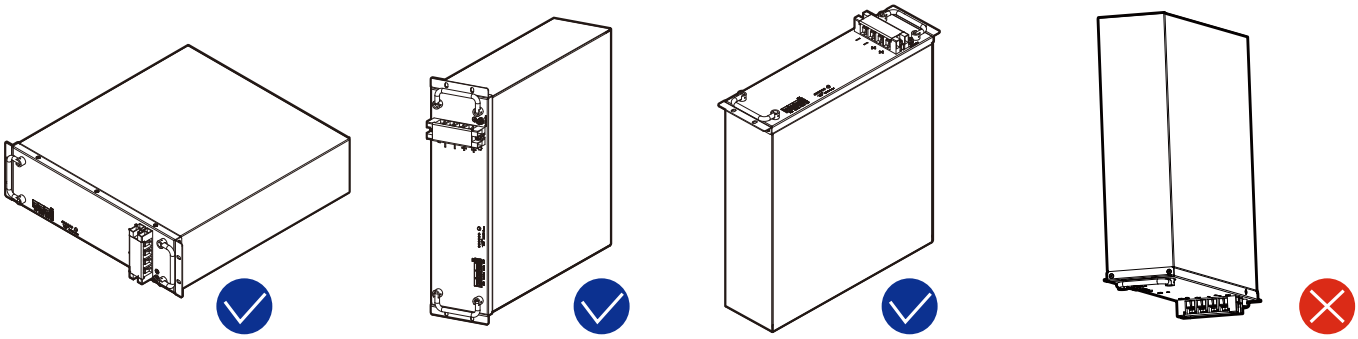

5.2 Stackable Installation with Bracket Support

CAUTION

Before installing battery, remove conductive ornaments such as watch, bracelet, and rings and wear protection equipment.

Check and confirm the battery is powered off and battery breakers are turned off before any process.

Step 1 Prepare support brackets.

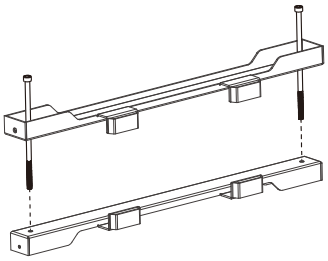

Step 2 Set the battery into 2 pcs of brackets from the rear.

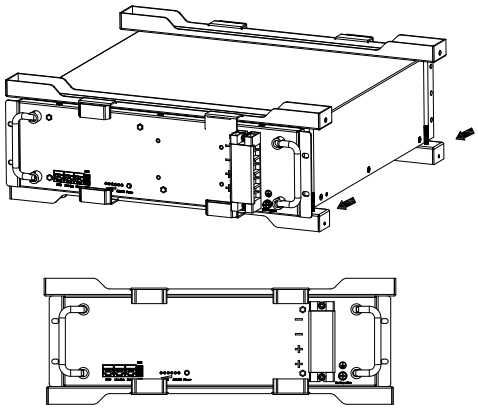

Step 3 Stack battery packs with brackets and fasten screws.
At most 8 battery packs can be stacked in this way.

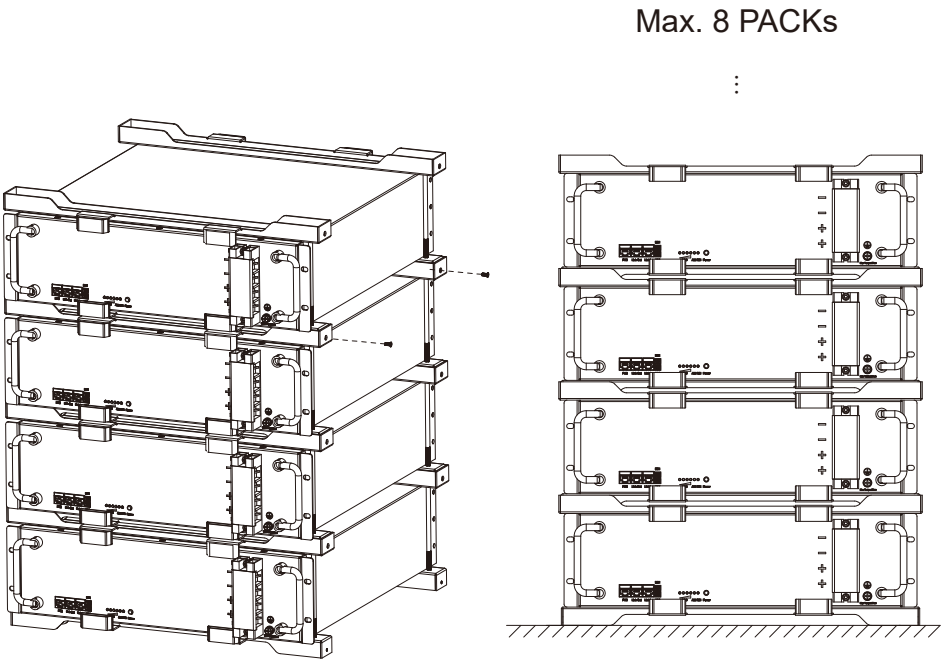

The battery stack can be placed in standing position or panel upward.

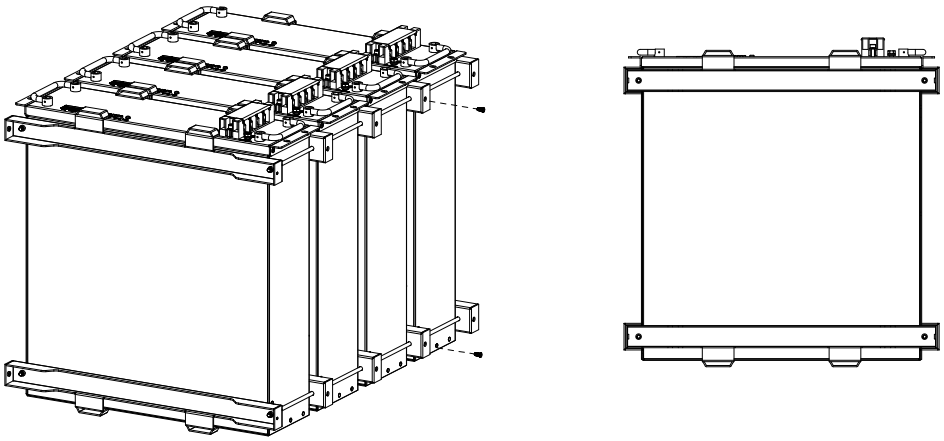

6 Electrical Connection

The battery provides three network ports and four power terminals for electrical connection.

Terminals/Ports	Type	Cable Cross-Section	Current Carrying Capacity
Grounding	M6	16mm²	
+/-	M6	25mm² or 3AWG	100A
PCS/Link-In/Link-Out	RJ45	24AWGX8	

6.1 Prepare Cables

Before connecting the batteries, you need to prepare grounding wire with OT lugs to meet the requirements of your applications.

CAUTION

Cables can be made by yourself or purchased from qualified providers.

It is recommended to purchase finished power wire products according to the terminal specifications of the battery. If you make cables on your own, please ensure that the terminals are crimped properly.

Make grounding wires with OT terminals.

Step 1 Strip cable sheaths and put a piece of heat shrinking tube along the wire.

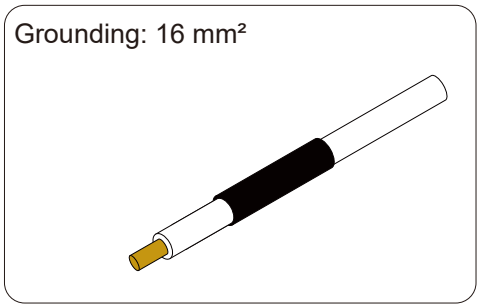

Step 2 Insert conductive wires into an OT terminal.

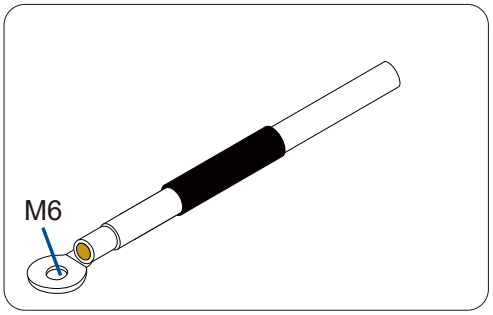

Step 3 Crimp the OT terminal with a hydraulic plier.

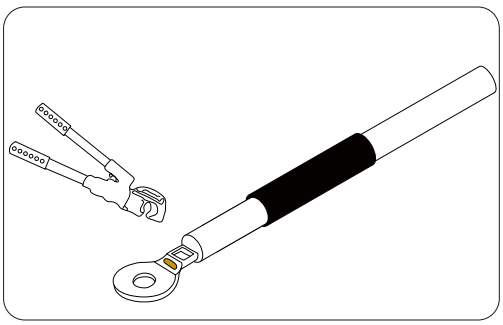

Step 4 Use a heat gun to heat the heat shrinking tube.

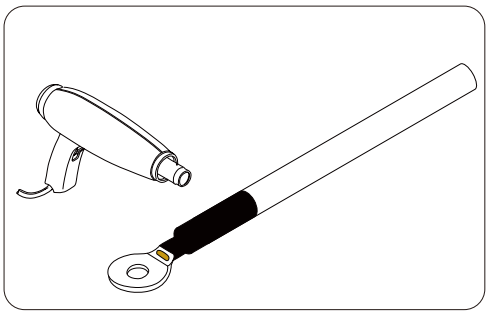

6.2 Connect One Battery

CAUTION

* Ensure that battery is in off mode and battery breaker is turned off.
* Ensure that no cable is twisted after battery is wired.

After making the cables ready and equipping yourself with protective devices, connect cables to the battery in the following way:

Step 1 Use an M6 screw to fasten the grounding wire to grounding terminal and fix the other end to the inverter directly.

Note that the cross-section of grounding wire is 16mm^2.

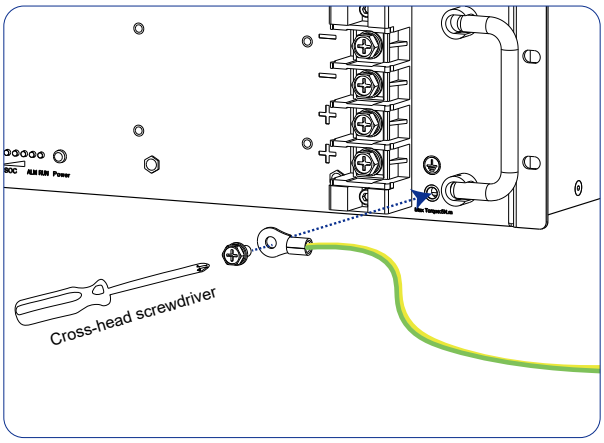

Step 2 Insert a network cable into battery port.

1. Plug one end of network cable A into the **PCS** port of battery, and plug the other end into the network port of the inverter.
2. Insert two terminators (a crystal plug with pin 4 and pin 5 short circuited) into **Link-Out** and **Link-In** respectively.

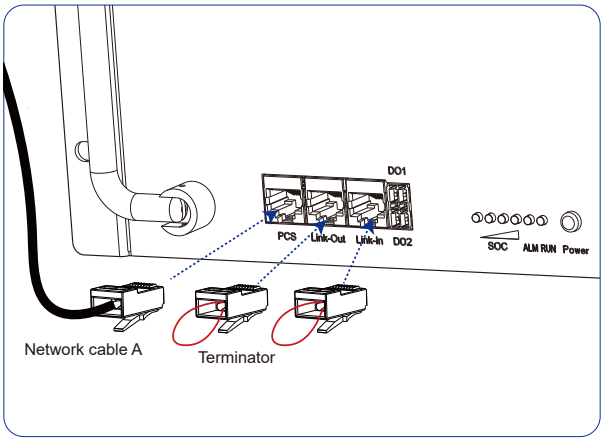

Step 3 Connect power wires.

1. Fix the OT terminals of power wires to one pair of the **+/-** terminals of the battery.
2. Put back the plastic cover.
3. Fix the other ends to a breaker and then connect to the inverter.

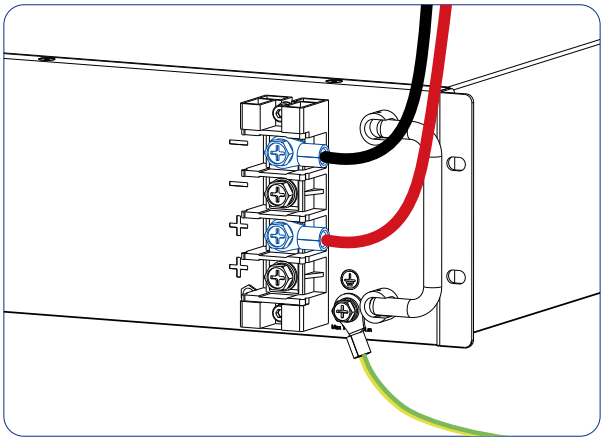

CAUTION

* When connecting a power wire, ensure that its OT terminal is placed in the correct direction.
* Do NOT stack two OT terminals onto one power interface.

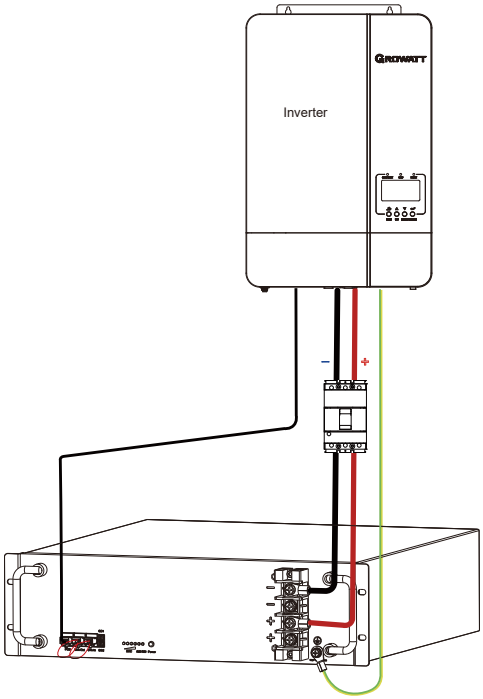

6.3 Connect Batteries in Parallel

CAUTION

- Ensure that all batteries are in off mode and battery breakers are turned off.
- Ensure that no cable is twisted after batteries are wired.
- The batteries shall be manufactured within one year and have a cycle difference less than 300.

Step 1 Confirm that the voltage difference is not greater than 1V.

1. Power on the batteries without load and use a multi-meter to measure their voltages.
2. If the voltage difference is greater than 1V, charge the battery with lower voltage.
3. Power off the batteries.

Step 2 Connect network cables.

1. Insert one end of network cable A into the **PCS** port of **Battery 1** and the other end into the network port of the inverter.
2. Insert a terminator (a crystal plug with pin 4 and pin 5 short circuited) into **Link-In** of **Battery 1**.
3. Use network cable B to connect the **Link-Out** port of **Battery 1** and the **Link-In** port of **Battery 2**. Connect the rest batteries in a similar way till the last one is connected.
4. Insert a terminator (a crystal plug with pin 4 and pin 5 short circuited) into **Link-Out** of **Battery 4**.

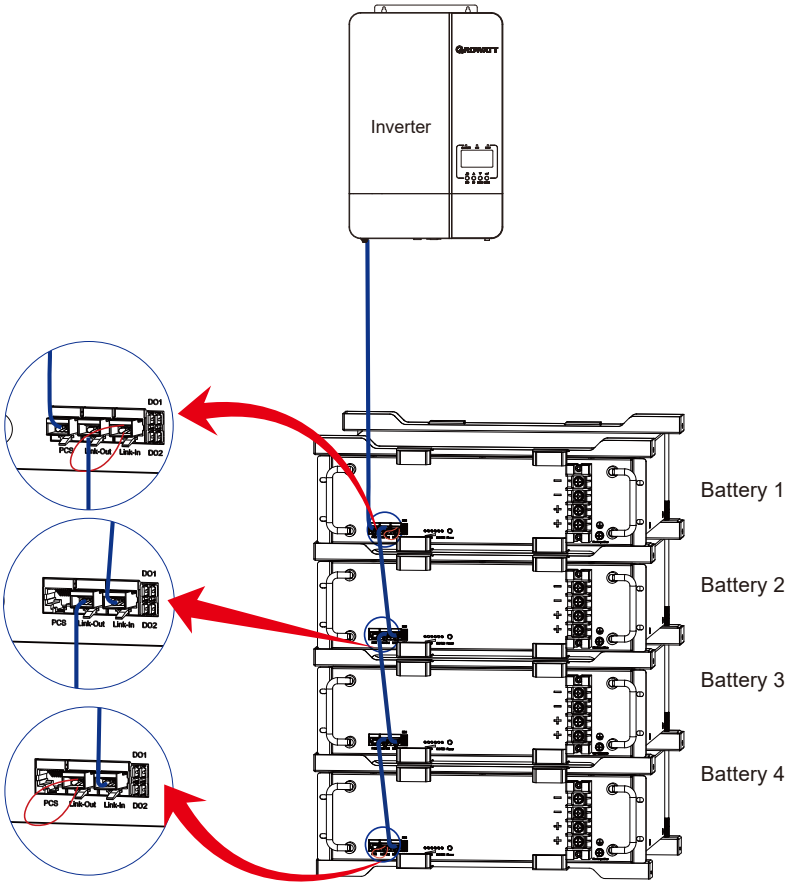

Step 3 Connect grounding wires.

Connect the grounding terminal of each battery to the grounding bar.

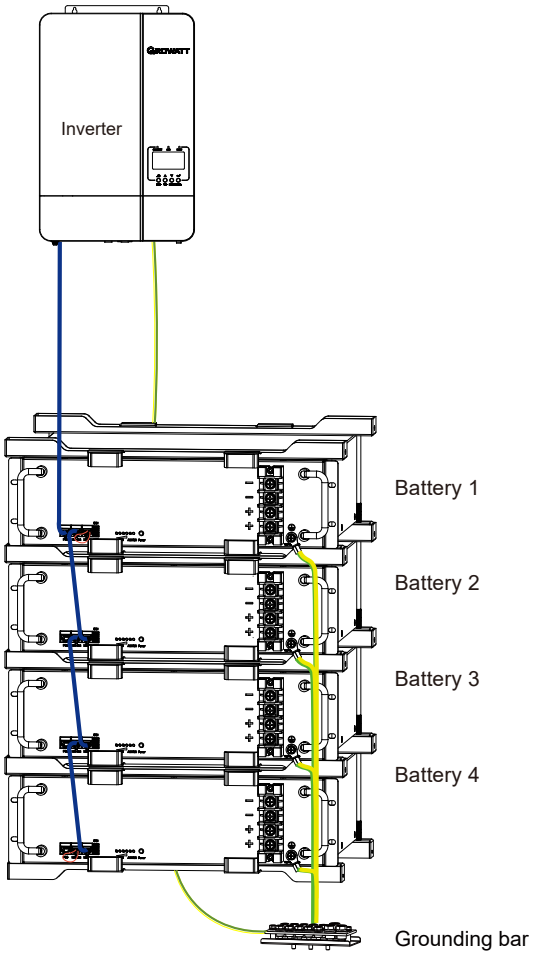

Step 4 Connect power wires.

Connect the **+/–** terminals of each battery to the +/- of the junction box respectively and then connect the junction box to the inverter.

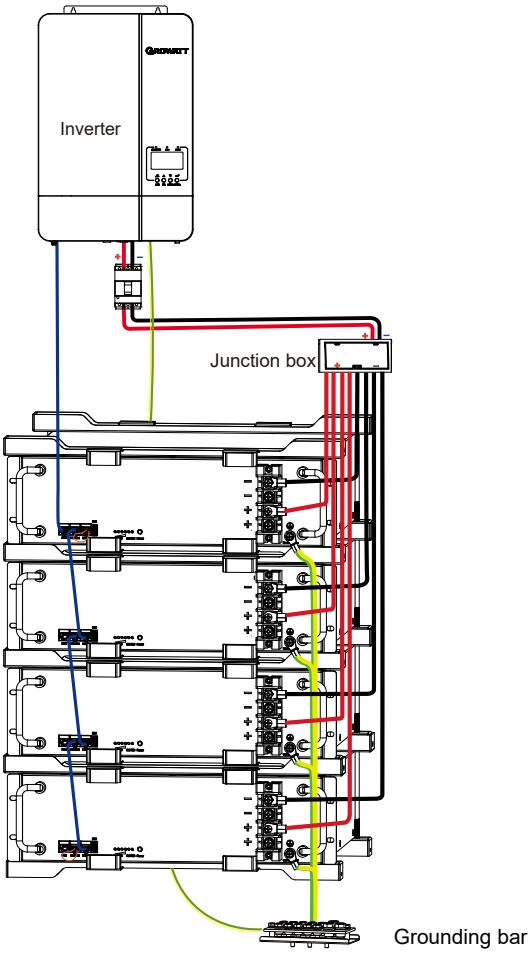

7 Operation and Commissioning

After the battery is installed and wired, operate and commission it to check if the battery works properly.

CAUTION

When operating or commissioning the battery, please strictly follow the safety instruction below:

* Technicians must go through technical training and obtain certificates in compliance with local laws and regulations.
* Please stand on dry insulating objects and do not wear metal objects such as watches, rings and necklaces during operation.
* Use insulating tools and wear protective devices.
* Do not contact with two charged positions with a potential difference.
* Hang a prohibition sign that stops people from turning on the breakers on the power distribution equipment if needed.
* If any abnormality is detected, immediately power off the battery. Proceed again only after causes are confirmed.

7.1 Power on Battery

Power on the battery in either of the following ways:

Keep the inverter on and turn on battery breaker(s). The battery(s) is activated after detecting a voltage from the inverter.

Alternatively, hold the **Power** button on battery for over one second.

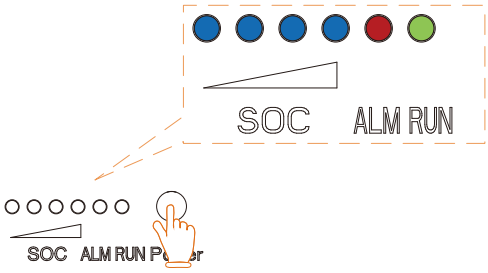

If LED1 to LED6 are lit on one by one and SOC indicators on all batteries indicate SOC correctly, batteries are powered on successfully.

After the battery(s) is powered on, observe it for 15 minutes to confirm that it can charge and discharge properly.

7.2 Power off Battery

Hold the **Power** button of the single battery or one battery in parallel connection for over two seconds. LED1 to LED4 and LED6 flicker for 2 times, and the battery(s) turns off.

CAUTION

* If a battery encounters undervoltage protection, it powers off five minutes later.
* If a battery encounters a communication abnormality or permanent fault, it powers off 15 minutes later.

All Rights Reserved © SHENZHEN GROWATT NEW ENERGY CO., LTD

SHENZHEN GROWATT NEW ENERGY CO., LTD
T: +86 0755 2747 1942
E: service@ginverter.com
W: www.ginverter.com
Address: 2nd&3rd Floor, Building 4, Jiayu Industrial Zone, Xibianling, Shangwu Village, Shiyan, Baoan District, Shenzhen, P.R. China

Other ManualsLib Projects

www.manualslib.com

www.manualslib.de

www.manualslib.es

www.manualslib.fr

www.manualslib.nl

www.manualslib.mx

www.manualslib.tech 30+ Languages