GROWATT

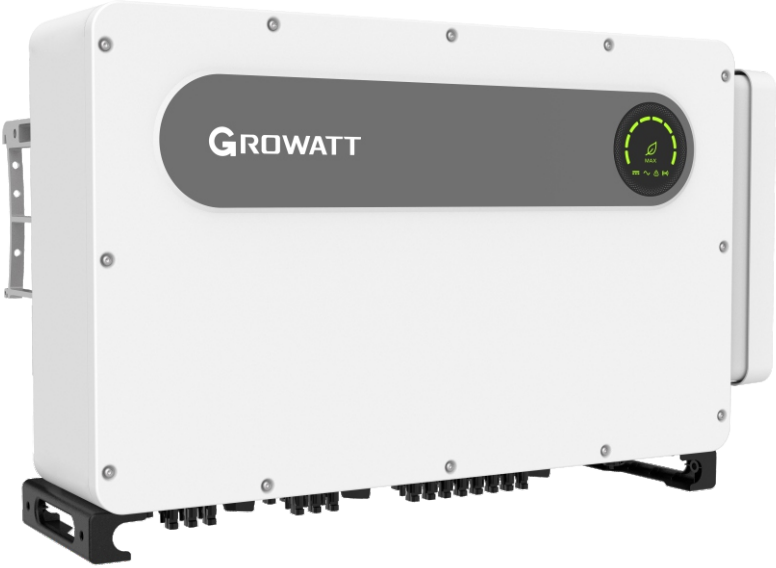

Installation & Operation Manual

Copyright © Shenzhen Growatt New Energy Co.,Ltd. All rights reserved.
No part of this document may be reproduced, stored in a retrieval system or transmitted, in any form or by any means, be it electronic, mechanical, photographic, magnetic or otherwise, without the prior written permission of Shenzhen Growatt New Energy Co.,Ltd. (hereinafter referred to as Growatt).

Notice

All products, services and features are stipulated by the contract made between Growatt and the customer. All or part of the products, services and features described in this document may not fall under the scope of purchase or usage. Unless otherwise specified in the contract, Growatt makes no representations or warranties, express or implied with respect to this documentation.
The content of this document is continually reviewed and amended, where necessary. However, discrepancies cannot be excluded. Growatt reserves the right to make changes to the material at any time and without notice in order to keep the document accurate and up-to-date. For the latest documents, you can visit our official website, scan the QR code on the manual or reach out to your distributor.

Contents

1 Introduction 1

1.1 Product Overview 1

1.2 Target Group 1

2 Safety Precautions 2

2.1 General Safety 2

2.2 Symbol Conventions 4

2.3 Lable Description 5

3 Product Introduction 6

3.1 Appearance 6

3.2 Basic Data 7

3.3 Nameplate 7

3.4 Working Principle 8

3.5 Inverter Storage 8

3.6 Grid Types 9

3.7 AFCI function 9

3.8 Anti-PID Function 9

4 Unpacking 10

5 Installation 11

5.1 Basic Installation Requirements 11

5.2 Installation Environment Requirements 12

5.3 Move the inverter 14

5.4 Install the wall mount bracket 15

5.5 Install the inverter 16

6 Electrical Connections 18

6.1 Connection on AC side 18

6.2 Connection on DC Side 24

6.3 Connection of Communication Cables 28

6.3.1 RS485 port 28

6.3.2 USB port 29

6.4 Inverter demand response modes (DRMS) 31

6.4.1 Using the Power Control Interface for EU 31

6.5 Connect the PE cable 33
7 Commissioning 35
7.1 Commission the Inverter 35
7.1.1 Set the communication address..... 35
7.1.2 Set the time and date..... 37
7.2 Operation mode 37
7.2.1 Waiting mode..... 37
7.2.2 Operating mode 37
7.2.3 Fault mode..... 38
7.2.4 Shutdown mode 38
7.3 LED Display 38
8 Monitoring 40
8.1 Remote Data Monitoring..... 40
8.1.1 Mobile phone APP(ShinePhone) remote monitoring..... 40
8.1.2 GPRS /4G 43
8.2 Local Data Monitoring 55
8.2.1 Mobile phone app (Shinephone) Local Monitoring 55
8.2.2 U Disk Monitoring 61
9 System Maintenance..... 64
9.1 Routine Maintenance..... 64
9.1.1 Clean the Inverter 64
9.1.2 Clean the fan..... 64
9.2 Troubleshooting 68
9.2.1 Warnings..... 68
9.2.2 Error..... 73
9.3 DC Switch Reset/Close Operation..... 78
10 Specifications 80
11 Decommissioning 83
11.1 Disposing of the inverter 83
12 Warranty 83
13 Contact.....84

1 Introduction

1.1 Product Overview

This manual is intended to provide product information and installation instructions for users of the MAX 150-180KTL3-X Inverter purchased from Shenzhen Growatt New Energy Co., Ltd. (hereinafter referred to as Growatt). Please read this manual carefully before using the product. This manual and other documents must be stored in a convenient place and be available at all times for installation, operation and maintenance personnel. For possible changes in this manual, Growatt accepts no responsibilities to inform users.

1.2 Target Group

Only qualified electrical technicians are allowed to install the MAX 150-180KTL3-X inverter. Installers should read through this manual prior to installing, commissioning and troubleshooting the MAX 150-180KTL3-X.
If questions arise during installation, you can visit en.growat.com to leave a message .

Safety Precautions 2

2.1 General Safety

1) Please read this manual carefully before installation. If the equipment is damaged due to non-compliance with the manual or exceeds the installation/usage scope specified in international standards, Growatt New Energy reserves the right to void the warranty.
2) Only qualified and trained electrical technicians are allowed to perform operations on the inverter.
3) During installation, please do not touch other parts inside the equipment other than the wiring terminals.
4) Ensure that all electrical connections comply with local electrical standards.
5) If maintenance is required, please contact the local authorized system installation and maintenance personnel.
6) Before operating the inverter in the on-grid mode, ensure that you have obtained any permission needed from the local grid operator.

Transportation:

WARNING	• As the inverter is heavy, use extreme caution when moving it to avoid injury due to accidental falls.

Installation:

NOTICE	• Please read this manual carefully before installation. Damages caused by failure to follow instructions specified in the manual are beyond the warranty scope.
DANGER	• Ensure that the inverter is not connected to a power supply and is not powered on before installation.
WARNING	• Please observe the installation instructions specified in this manual, including the installation environment and clearance requirements. • Install the inverter in a dry and well-ventilated location; otherwise, performance de-rate may be initiated due to excessive heat. • Please read the installation instructions and safety precautions carefully before installation.

Electrical Connections:

DANGER	• Before electrical connections, make sure that the DC switch of the inverter is in the "OFF" position and that the AC breaker is disconnected, otherwise high voltages may cause lethal injuries. • Only qualified and trained electrical technicians are allowed to perform electrical connections and all instructions specified in this manual should be observed. • Do not touch the inverter in operation as high voltages might lead to lethal injuries. • Do not place flammable or explosive materials around the inverter.
WARNING	• Each inverter must be equipped with a separate AC circuit breaker. Multiple inverters cannot connect to the same AC circuit breaker. • Do not connect loads between the inverter and the circuit breaker. • If the cable is thick, do not wiggle it after tightening the cable terminals. Ensure that the terminals are properly connected before powering on the inverter. Otherwise, loose connection may cause overheating and device damage. • Ensure the correct polarity before connecting the PV panels to the inverter.

Maintenance and Replacement

DANGER	• All operations must be performed by trained and professional electricians, and all instructions specified in this manual should be observed. • Wait at least 5 minutes after turning off the DC switch and AC breaker to avoid dangers. Do not perform any operation with power on. • If the inverter reports “PV Isolation low” , do not touch the enclosure as a ground fault might have occurred. • Beware of high voltages which can cause electric shocks.
WARNING	• For better cooling purpose, please regularly clean the fans. • Do not use air pump to clean the fans cause it may damage the fans.

Other:

	• Upon delivery, check if the package of the inverter is intact. For any damage, please contact your supplier.
WARNING	• The maximum input voltage should not exceed 1100V. • For the inverter that will not be put into operation in the future, you should properly dispose of it in accordance with applicable local regulations.

2.2 Symbol Conventions

Symbol	Description
DANGER	DANGER indicates a hazardous situation which, if not avoided, will result in death or serious injury.
WARNING	WARNING indicates a hazardous situation which, if not avoided, could result in death or serious injury.
CAUTION	CAUTION indicates a hazardous situation which, if not avoided, could result in minor or moderate injury.
NOTICE	NOTICE indicates a situation which, if not avoided, can result in property damage.
	Information that you must read and know to ensure optimal system operation.

2.3 Lable Description

Symbol	Designation	Meaning
	High Voltage Electric Shock	High voltages are present in a running inverter. All work on the inverter must be performed by well-trained electrical technicians.
	Burn Warning	Do not touch a running inverter cause it generates high temperature on the case.
	Protective Grounding	Connect inverter to grounding bar.
5min	Delayed Discharge	Residual voltage exists after the inverter is powered off, and it takes 5 minutes for the inverter to discharge to the safe voltage.
	Refer to the manual	Reminds the operator to refer to the manual before operating or installing the inverter.
	DC	Direct current
	AC	Alternating current
CE	CE Mark	The inverter complies with the requirements of the applicable CE guidelines.

Product Introduction 3

3.1 Appearance

Front view:

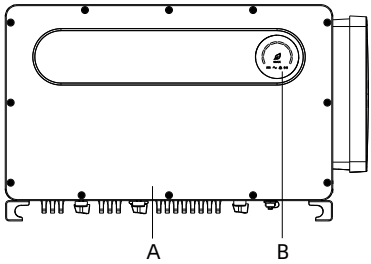

Fig 3.1

Bottom view (connection area):

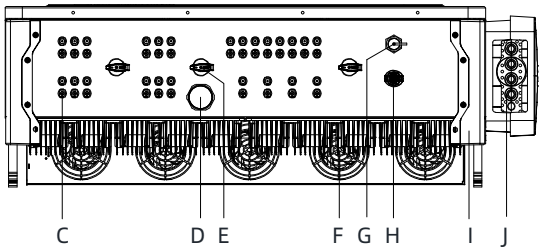

Fig 3.2

Side view:

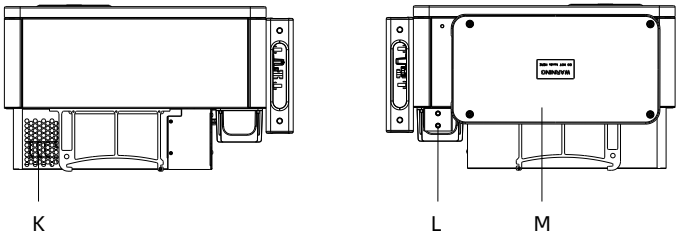

Fig 3.3

Mark	Description	Mark	Description
A	Front panel	H	COM interface
B	LED	I	Corner guard
C	PV terminal	J	Waterproof silicone pad
D	Ventilation valve	K	Heat sink
E	DC switch	L	Ground screw hole
F	External fans	M	Junction Box
G	USB interface		

3.2 Basic Data

Model	Size(mm)			Weight (kg)
	Width	Height	Thickness	
MAX 150-180KTL3-X Series Inverter	1075	640	370	93
MAX 150-180KTL3-X Series Inverter with package	1245	830	530	110.6

3.3 Nameplate

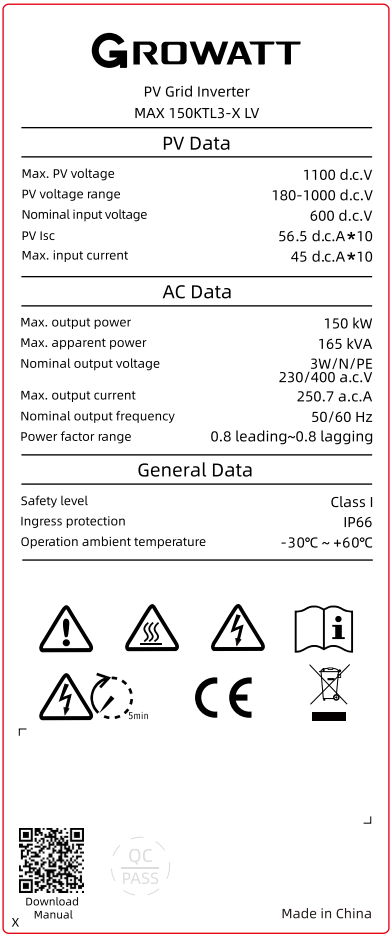

Note: The figure above shows the nameplate of MAX 150KTL3-X LV as an example. The nameplate figure is for reference only. The actual nameplate prevails. For detailed specifications, please refer to Section 10 Product Specifications

3.4 Working Principle

Working principle of the MAX 150-180KTL3-X series inverter:

1> The PV strings generate DC power with solar irradiance and send the DC power to the inverter.

2> Monitor the operating status of all PV modules via the input current sensor circuit and track the maximum power point with the MPPT (Maximum Power Point Tracker).

3> Convert the DC power into the grid-compliant AC power through the inverter circuit and feed the power to the grid.

4> Isolate the inverter AC output from the grid with the isolation relay to ensure safe disconnection when the inverter or the grid fails.

Grid-tied PV system diagram:

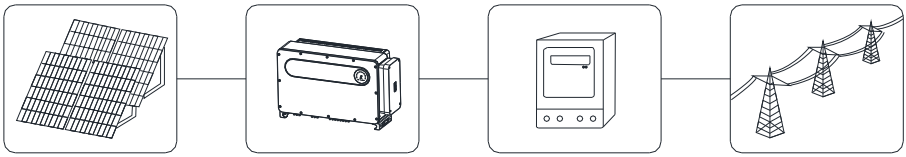

Fig 3.4

Item	Description	Item	Description
A	PV string	C	Electric meter
B	Inverter	D	Grid

3.5 Inverter Storage

1> If possible, always pack the inverter in its original carton and place it in a dry and well-ventilated location.

2> Keep the storage temperature between -30℃ and +60℃, and the humidity from between 0% and 95% RH.

3> The maximum layers for original carton is three. Do not stack the inverter without package.

4> If the inverter has been stored long term, qualified personnel should carry out inspections and tests before installation.

	The inverter might display the wrong time and date if it has been stored for over one month. You need to set the correct time and date before connecting the inverter to the grid. For details, please see Section 7.1.

3.6 Grid Types

For the MAX 150-180KTL3-X series inverter, Fig 3.5 shows the grid connection mode of the MAX 150KTL3-X LV model, and Fig 3.6 shows the grid connection mode of the MAX 180KTL3-X MV model.

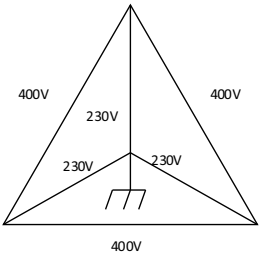

Fig 3.5

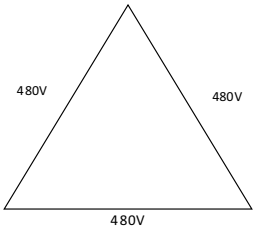

Fig 3.6

3.7 AFCI function

AFCI is a circuit protection device, used to prevent fires caused by arc faults. Arc faults can be a result of aging of electrical insulation, insulation damage, loose connection or humid environment, which could lead to dielectric breakdown and sparks.

The AFCI function is optional for the MAX 150-180KTL3-X series inverter. The detection device is integrated inside the inverter. When an arc occurs on the PV side, detected by the CT installed on the PV-side cable, the inverter will shut down, display the fault message and the buzzer will sound to avoid safety hazards and property loss.

Note: AFCI function is optional.

3.8 Anti-PID Function

PID stands for Potential Induced Degradation. It occurs when a large amount of charge accumulates on the surface of the PV modules, causing the surface passivation to deteriorate. This leads to a decrease in the fill factor, open-circuit voltage, short-circuit current, and the power output of the PV modules.

Taking advantage of the principle that PID can be reversed, the MAX 150-180KTL3-X inverter can generate a DC voltage during nighttime by rectifying the AC voltage and then boosting it. The DC voltage output is connected to PV+ and the ground, applying a positive bias to reverse the PID effect and extend the service life of the PV modules.

Note: The Anti-PID function is optional.

Unpacking 4

Inspection upon delivery

1> Before unpacking the inverter, check the shipping box for any externally visible damage.

2> After unpacking the inverter, check for any cosmetic damage or missing component. If any damage is found or any component is missing, please contact your distributor.

Package contents:

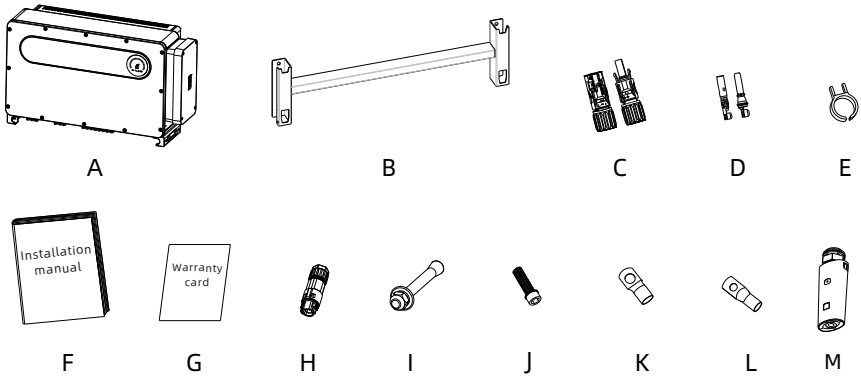

Fig 4.1

Position	Description	Quantity
A	Inverter	1
B	Wall mount bracket	1
C	PV+ connector/PV- connector	24/24
D	Positive metal contact/Negative metal contact	24/24
E	PV connector removal tool	1
F	Installation manual	1
G	Warranty card	1
H	Communication connector	1
I	M10*90 expansion screw	4
J	M6*28 three-in-one screw	2
K	AC wiring copper cable lug (SC95-12)	4
L	Grounding terminal (RH50-8)	1
M	Data Logger (Optional)	1

5 Installation

CAUTION	• To prevent device damage and personal injury, keep balance when moving the inverter because it is heavy. • Do not place the inverter with its wiring and signal terminals at the bottom contacting with floor or any other object because the terminals are not designed to support the weight of inverter. • When placing inverter on the floor, put foam or paper under the inverter to protect its cover.

5.1 Basic Installation Requirements

A. Ensure that the installation surface is solid enough to bear the weight of the inverter. (For the weight of the inverter, see Section 3.2 Basic data.)
B. Ensure that the installation position is suitable for the dimensions of the inverter.
C. Do not install the inverter in flammable, explosive, or smoky environments, or on buildings made of heat-sensitive materials.
D. The inverter is protected to IP66 and can be installed indoors or outdoors.
E. Do not expose the inverter to direct sunlight. Otherwise, the excessive heat may lead to power reduction.
F. Keep the humidity at 0% to 95% RH.
G. The ambient temperature around the inverter should be between -30°C and +60°C. In dusty environments (e.g., areas with smoke, dust, or excessive fibers), particles may accumulate on the inverter's vents or heat sinks, affecting heat dissipation and potentially causing damage. Avoid installing the inverter in dusty environments. If unavoidable, regularly clean the fans and heat sinks to ensure proper cooling.
H. The inverter can only be vertically mounted on a flat ground or a vertical wall. Please refer to the following figures:

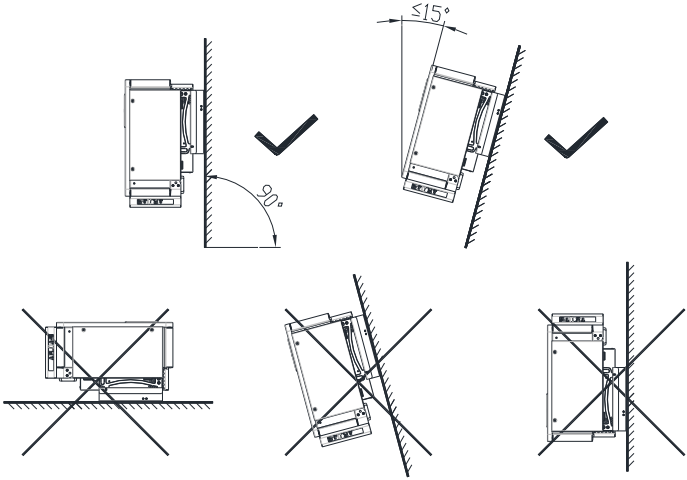

Fig 5.1

I. Reserve enough space around the inverter to ensure sufficient space for heat dissipation and operation, as shown below:

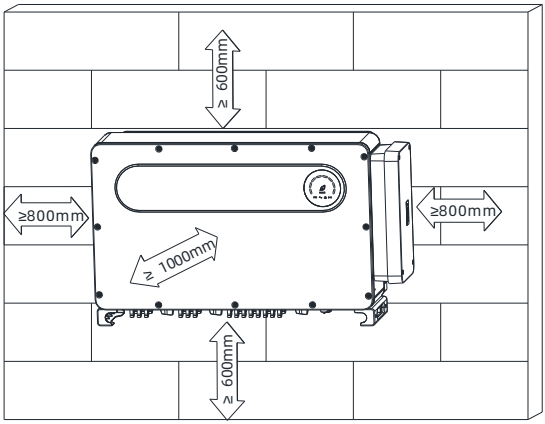

Fig 5.2

J. Do not install the inverter in areas with strong vibrations, loud noise, strong electromagnetic interference, or near strong electromagnetic signals.
K. Ensure that the inverter is not accessible to children.
L. If the inverter is installed in a lush vegetation environment, modify the ground beneath it by laying cement or gravel (recommended area: at least 3m × 2.5m).
M. If the inverter remains unused for over six months after installation, it may malfunction and require professional inspection before use. If installed in a sandy/dusty environment, add protective measures to the vents to prevent long-term dust accumulation and blockage. Remove these protections before use.

5.2 Installation Environment Requirements

A. Though the inverter is protected to IP66, do not expose it to direct sunlight, rain and snow. Please refer to the figures below:

Fig 5.3

B. To reduce the de-rate performance of the inverter and extend inverter's lifespan, we strongly recommend you install an awning. For the distance between an awning and the inverter, please refer to following drawing.

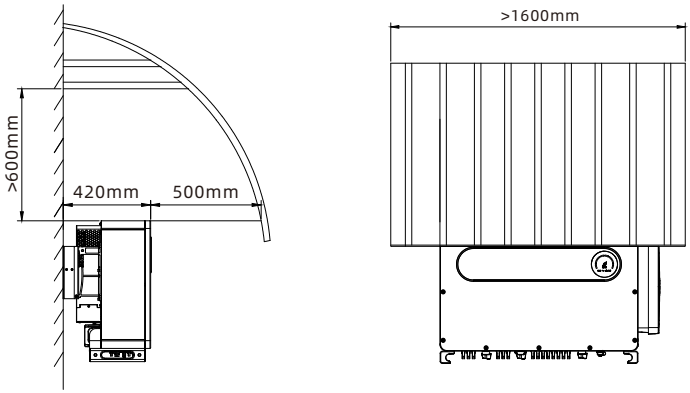

Fig 5.4

C. If multiple inverters are installed on the same surface, the clearance requirements between inverters are shown below. (You can install them in one of the following modes).

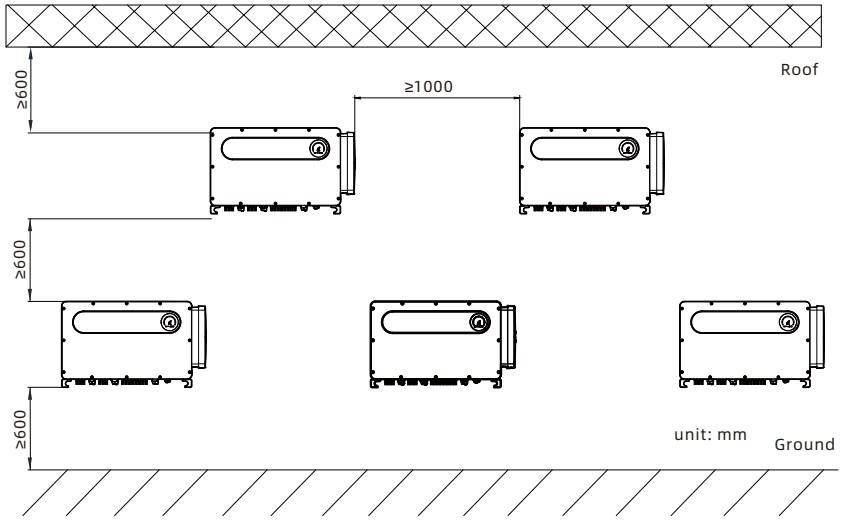

Fig 5.5

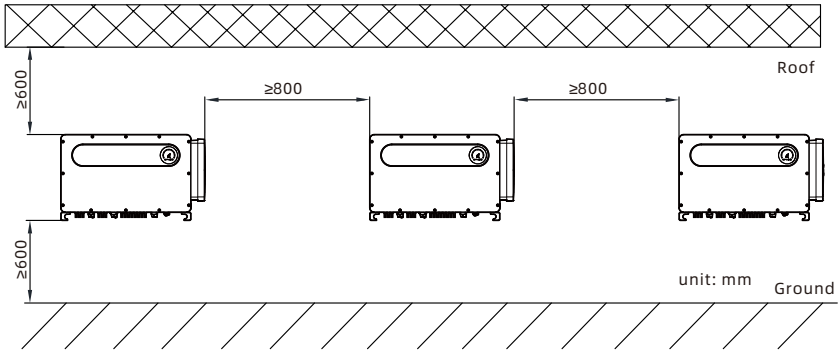

Fig 5.6

D. Do not operate the inverter in a closed or narrow space.

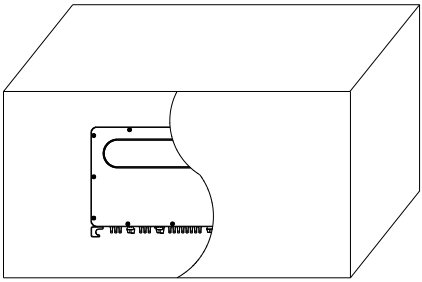

Fig 5.7

5.3 Move the inverter

WARNING	• To prevent personal injury caused by a falling inverter, keep balance and be careful when moving the inverter as it is heavy. • Do not place the inverter with its wiring and signal terminals at the bottom contacting with floor or any other object because the terminals are not designed to support the weight of inverter.

1> As shown in Fig 5.8, 4-6 persons are required to lift the inverter out of the package and move it to the installation position.
2> Keep balance when moving the inverter.

Note: The front side and bottom side of the inverter are indicated on the box.

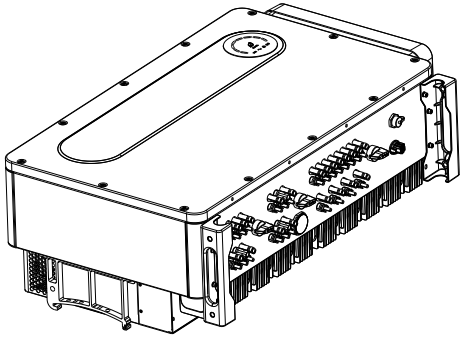

Fig 5.8

5.4 Install the wall mount bracket

Before mounting the inverter, you need to installed wall mount bracket delivered with the inverter first to ensure that the inverter can be securely mounted on the wall.

Mounting bracket diagram:

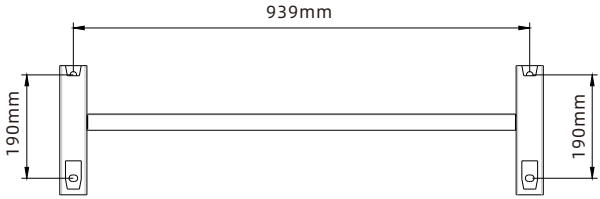

Fig 5.9

1> Use the mounting bracket as the drilling template. Drill holes in accordance with the screw holes of the bracket, then insert the expansion bolts.

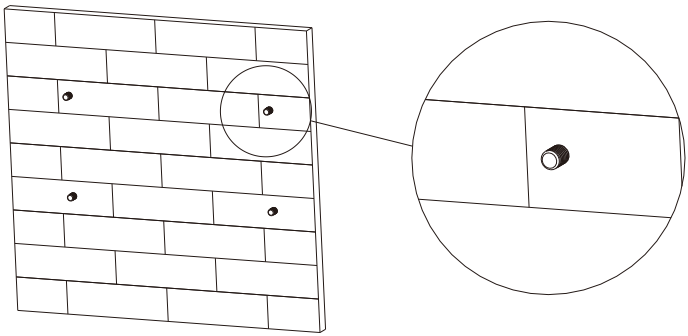

Fig 5.10

Note: The expansion bolts must be installed in cement or brick walls with a thickness of at least 100 mm.

2> Secure the bracket onto the wall using screws as shown below.

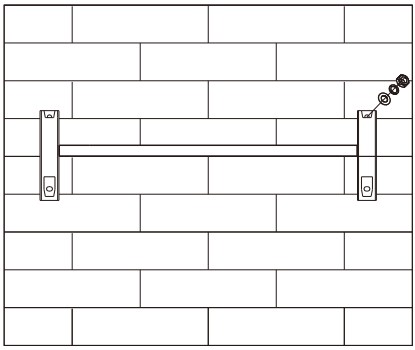

Fig 5.11

Note: Do not mount the inverter onto the bracket until you make sure that the bracket has been secured in place.

5.5 Install the inverter

Mount the inverter onto the bracket after confirming that the bracket has been secured in place.

Procedure:

1> Run the rope that is strong enough to bear the inverter through the supporting elements to hoist the inverter.

2> Hang the inverter onto the mounting bracket and secure it with screws. Keep balance while hanging the inverter.

3> Check if the inverter has been securely mounted and tighten all screws.

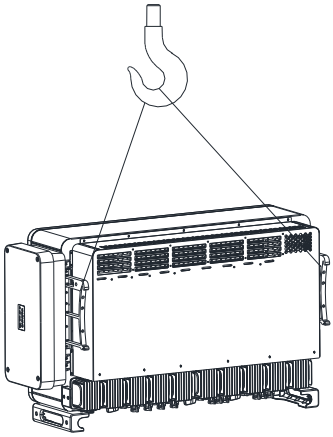

Fig 5.12

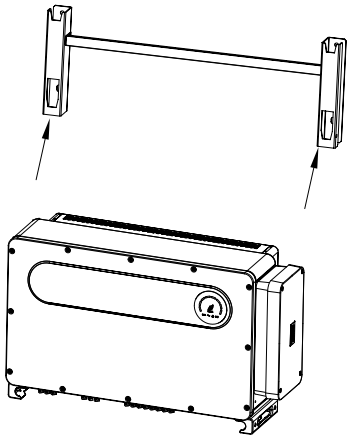

Fig 5.13

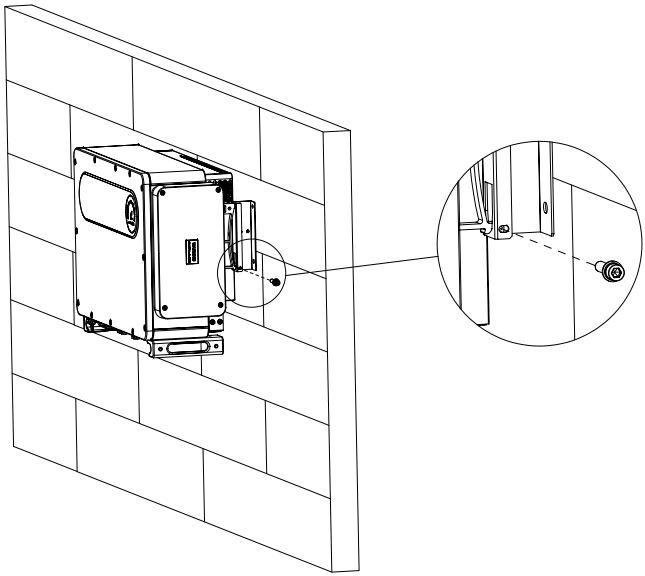

Fig 5.14

Electrical Connections 6

Decisive Voltage Class (DVC) indicated for ports

Port Name	Class	Port Name	Class
AC	C	DRMS	A
DC	C	RS485&USB	A

6.1 Connection on AC side

DANGER	• Before electrical connections, make sure that the DC switch of the inverter is in the "OFF" position and that the AC breaker is disconnected, otherwise high voltages may cause lethal injuries. • Only qualified and trained electrical technicians are allowed to perform electrical connections. Comply with all safety information specified in this manual and local regulations. • Do not touch the inverter in operation as high voltages might lead to lethal injuries. • Do not place flammable or explosive materials around the inverter.
WARNING	• Each inverter must be equipped with a separate AC circuit breaker. Multiple inverters cannot connect to the same AC circuit breaker. • Do not connect loads between the inverter and the circuit breaker.

1. Preparation before connection:
1> Turn off the DC switch and the AC breaker or switch.
2> Torque for securing the AC cable: 35 N·m (350 kgf·cm)
Torque for securing the front panel: 2.5-3.0 N·m (25-30 kgf·cm)
3> Measure the grid voltage and frequency. See Section 10 Specifications for more information about the technical parameters.

AC breaker specification:

Inverter model	AC breaker specification
MAX 150KTL3-X LV	300A/400V
MAX 180KTL3-X MV	300A/500V

Cable specification:

Inverter Model	Cross-sectional area (mm^2)	Copper wire recommendation (mm^2)	Aluminum wire recommendation (mm^2)
MAX 150KTL3-X LV	95-300	95	120
MAX 180KTL3-X MV			

Note:
The wires should be tinned. Do not use frayed or cracked wires. If an aluminum alloy cable is used, please use the copper-aluminum connecting terminal.

2. AC terminal crimping diagram:

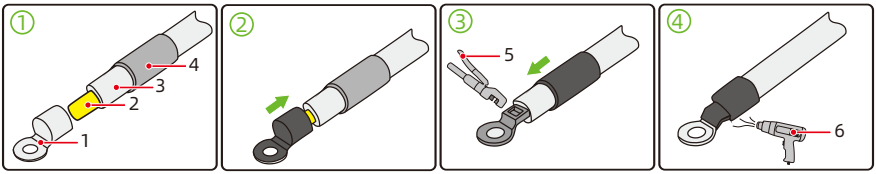

(1) OT/DT Terminal (2) Core wire (3) Cable

(4) Heat shrink tubing (5) Hydraulic pilers (6) Heat gun

Fig 6.1

Note: When using different cables, the OT/DT terminals also have specific requirements, as shown in the figure below.

WARNING	• It is strictly prohibited to connect aluminum terminals directly to the copper terminal block, as this may cause electrochemical corrosion and compromise the reliability of the cable connection. • When using copper-aluminum transition terminals or aluminum terminals with copper-aluminum transition washers, compliance with IEC 61238-1 is required. • When using copper-aluminum transition washers, ensure correct orientation: the aluminum side must contact the aluminum terminal, and the copper side must contact the terminal block.

Recommended torque:35N.m

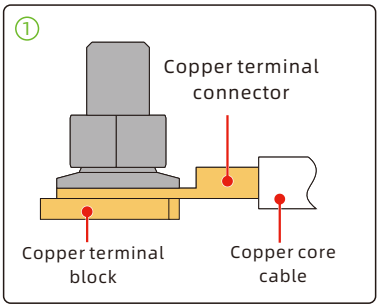

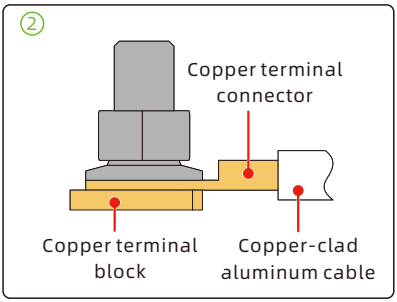

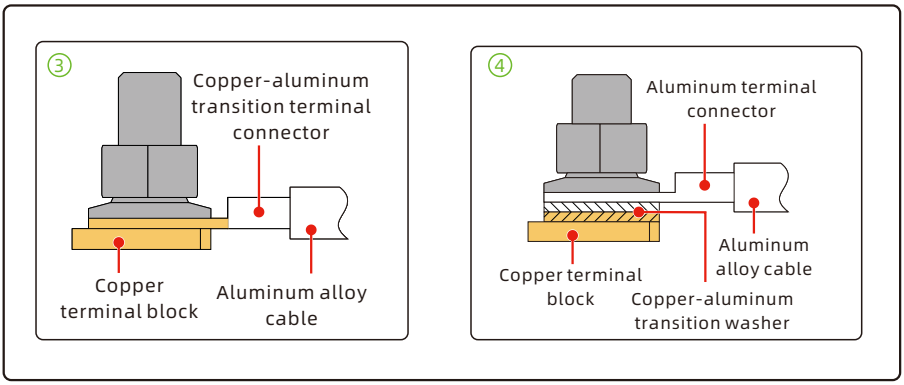

Fig 6.2

For the correspondence between the diameter of single-core and multi-core wires and the number of removed sealing rings, as well as the wiring method for single-core wires, Please refer to the following for the specific operation .

Reference Table: Single-Core Wire Diameter vs. Number of Removed Sealing Rings

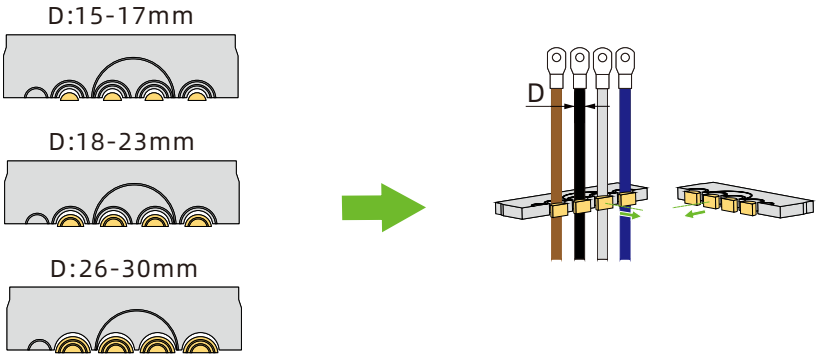

Fig 6.3

Reference Table: Multi-Core Wire Diameter vs. Number of Removed Sealing Rings

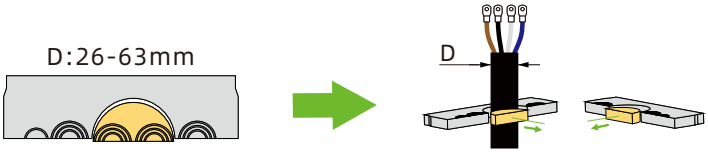

Fig 6.4

The illustration of single-core wire wiring in the complete unit is shown in Figure 6.5 below, and the illustration of multi-core wire wiring in the complete unit is shown in Figure 6.6 below.

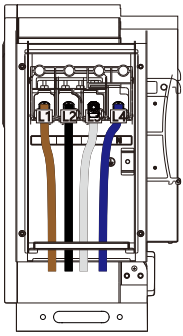

Fig 6.5

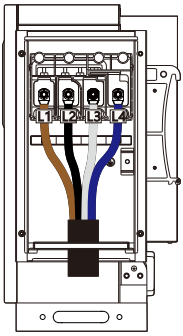

Fig 6.6

Note: Do not pass cables with pre-crimped terminals through waterproof connectors, as this may damage the rubber lining.

3. AC wiring procedure

WARNING	• If the cable is thick, do not wiggle it after tightening the cable terminals. Ensure that the terminals are properly connected before powering on the inverter. Otherwise, loose connection may cause overheating and device damage.

1> The following figure shows the AC terminal of the inverter. Terminals labeled R, S and T are for live wires and the one labeled N is for the neutral wire.

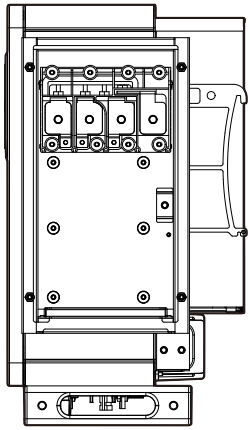

Fig 6.7

2> Determine the stripping length according to the specification of the crimp terminal (recommended length: 30 mm). Crimp the cable and the terminal using a crimping plier. Thread the cable through the waterproof silicon pad and connect it to the corresponding terminal. Tighten the screws to secure the cable.

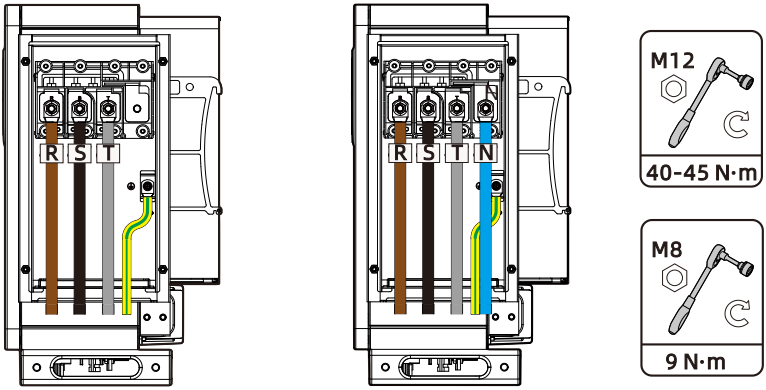

Fig 6.8

Please clear any foreign objects from the terminal box, close the terminal box cover, confirm that the cable entry holes at the bottom of the terminal box are sealed, and finally tighten the screws as shown in Figure 6.9.

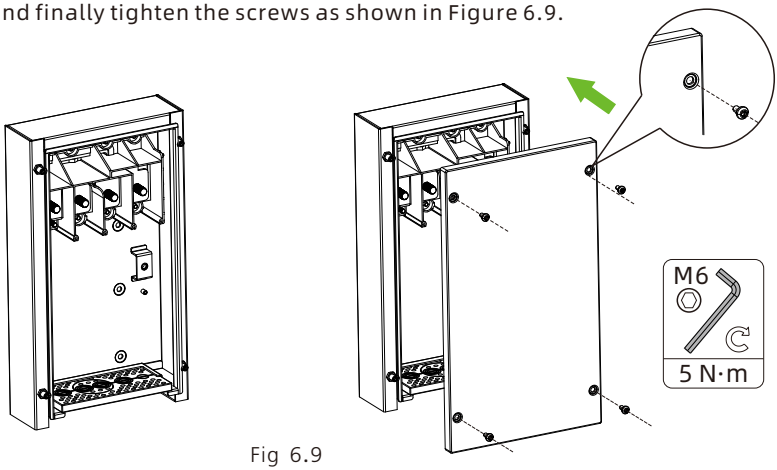

Fig 6.9

3>Upon completion of the AC wiring, remember to seal the water-proof silicone mat with the fireproof mud in order to ensure good waterproof performance.

WARNING	•The device damage caused by failure to seal the output terminal gaps as instructed is beyond the scope of warranty and Growatt New Energy shall not be liable for the damage.

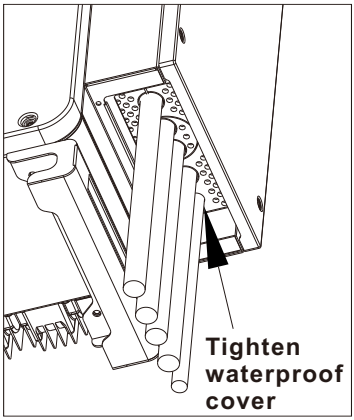

Fig 6.10

6.2 Connection on DC Side

DANGER	• Before electrical connections, make sure that the DC switch of the inverter is in the "OFF" position and that the AC breaker is disconnected, otherwise high voltages may cause lethal injuries. • Only qualified and trained electrical technicians are allowed to perform electrical connections. Comply with all safety information specified in this manual and local regulations. • Ensure correct polarity before connecting the PV modules to the inverter. • Do not touch the inverter in operation as high voltages might lead to lethal injuries. • Do not place flammable or explosive materials around the inverter.

Note:
Hazardous voltages are present on the PV panel in series with solar irradiance, which might cause lethal hazards. Cover the PV panels with dark material prior to connecting the DC input cables and ensure that the DC switch is in the OFF position, otherwise the high voltages of the inverter might lead to lethal hazards.

DANGER	• The DC switch will automatically trip when an internal inverter fault occurs (indicated by a steady red alarm or fault LED light, and the DC SWITCH will trip automatically). After the switch trips, please contact the customer service center. Do not manually close the DC switch. • The DC switch will automatically trip and enter the "OFF" state when the inverter encounters alarms such as "String Reverse Connection" or "String Reverse Current". In this case, do not reset the DC switch immediately. First, check the fault type via monitoring data, etc. Only after the fault is resolved should the reset/close operation be performed. Please refer to the following for the specific operation 9.3.

WARNING	• Please ensure that the following conditions are met, as failure to do so may damage the inverter or pose a fire hazard. In such cases, the company shall not be liable for any consequences.

1> The max. open-circuit voltage of each string should not exceed 1100Vdc.
2> The PV modules connected in series should be of the same model.
3> The max. short-circuit current per MPPT must not exceed 56.5 A under any circumstance.
4> The power of the PV panels should not exceed 1.5 times of the max. input power.
5> To optimize system configuration, you are advised to connect a same number of PV modules per string.
6> Please use the positive and negative metal contacts and the DC connectors delivered with the inverter package. Using other incompatible models may result in severe consequences, which will void the warranty.
7> When assembling the DC connectors, pay attention to the correct polarity and label the positive and negative cables.
8> Crimp the PV metal contact with a dedicated crimper. Using an inappropriate crimping tool may lead to severe consequences, and any device damage caused by this is not covered by the warranty.
9> Cables with high rigidity are not recommended for the DC input as bending of cables may lead to poor contact of terminals.
10> Determine the stripping length according to the specification of the crimp terminal. Crimp the cable and the terminal using a crimping plier, thenconnect them to the corresponding connector housings until you hear the “Click” sound to ensure the secure connection. After snapping the positiveand negative connectors into place, pull the cables slightly to ensure thatthey are securely in place.

11> Mate the matching male and female connectors. Before connecting the PV modules to the inverter, identify the polarity carefully. Connect the positiveconnector from the PV module to the DC input terminal labeled “+” and thenegative connector to the DC input terminal labeled “-” .he solar panels'positve pole connect to” +” negative pole connect to” -” .

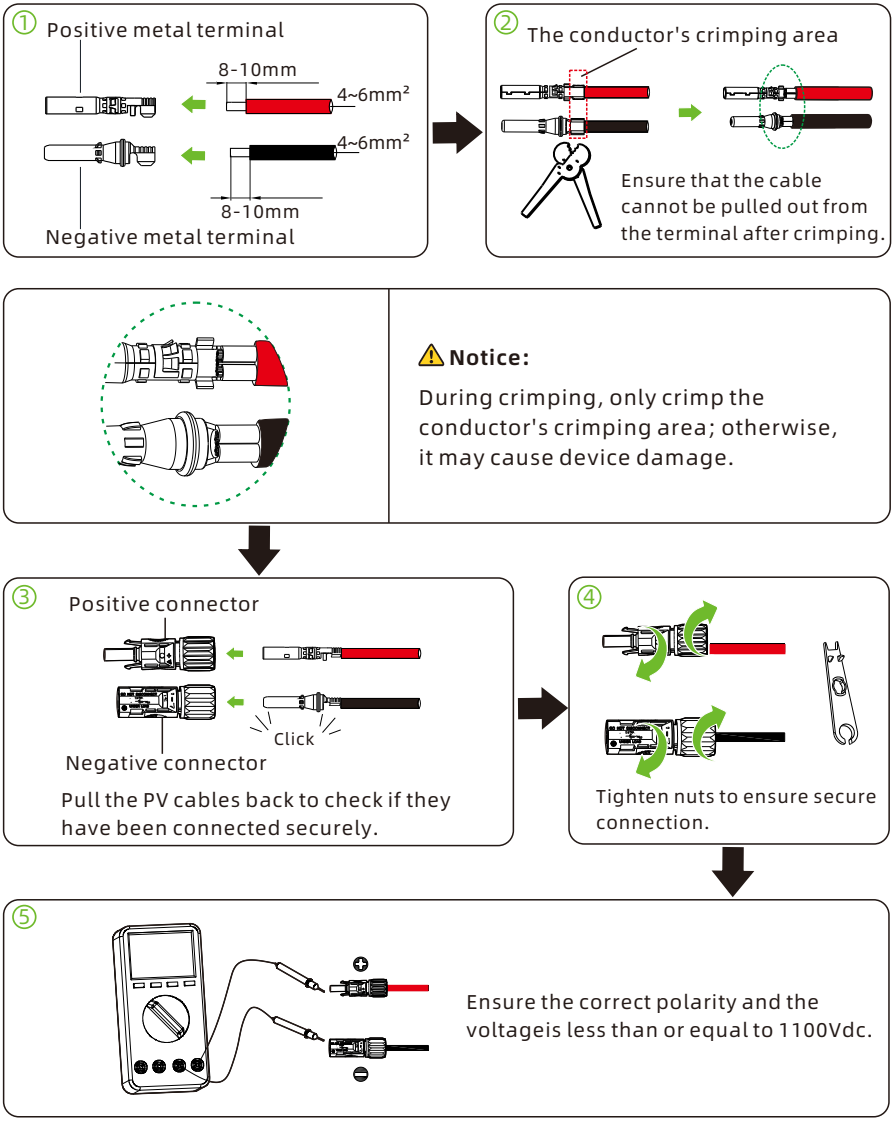

Fig 6.11

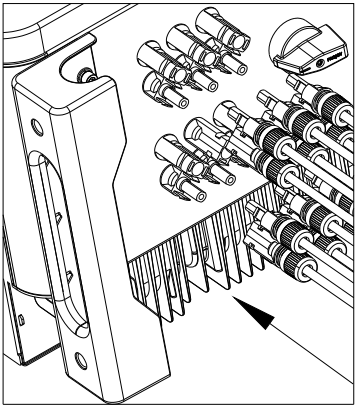

Fig 6.12

12 > For the unused PV terminls on the inverter, please cover them with blue dustproof caps.

13> When wiring the DC input cables at the installation site, leave at least 50 mm of them slack. The axial tension on the PV connector should not exceed 80N and do not apply radial stress or torque on the PV connectors.

14> Connect the positive and negative PV cables to the inverter. The max. input current per string for different inverter models are shown below:

Inverter model	Max. input current per string
MAX 150-180KTL3-X	22.5A*2

15> Cable specifications:

Inverter model	Cross-sectional area(mm^2)	Recommendation (mm^2)	Cable outer diameter(mm)
MAX 150-180KTL3-X	4-6	4	4.5-7.8

Note:

1. Under any circumstance, the total current of all strings cannot exceed the inverter's maximum current.
2. Do not touch any solar panel in operation.
3. The wires should be tinned. Do not use cracked or frayed wires.

6.3 Connection of Communication Cables

6.3.1 RS485 port

Long-distance and high-speed communication of a single inverter or multiple inverters connected in parallel (up to 32 units) can be established via RS485. It is recommended to use the twisted-pair shielded cable for RS485 communication. For a single inverter, the communication cable can be connected to Pin 3/4, and its shielding layer can be connected to Pin 1. For multiple inverters connected in parallel, two RS485-1 ports can be connected simultaneously, and the shielding layer can be connected to Pin 1/2. As Fig 6.9 shows, there are two types of RS485 COM port.

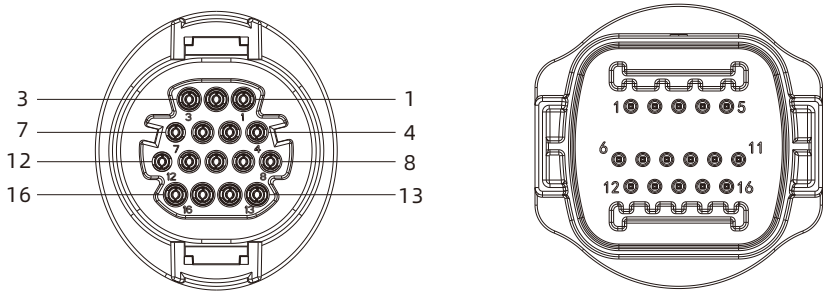

COM Port Type 1

COM Port Type 2

Fig 6.13

Port	PIN	Description	Port	PIN	Description
Shielded grounding	1/2	485-1/485-2 PE shield	DRMS	9	DRM1/5
RS485-1 IN	3	485-1 A1		10	DRM2/6
	4	485-1 B1		11	DRM3/7
RS485-1 OUT	5	485-1 A1		12	DRM4/8
	6	485-1 B1		13	REF/GEN
RS485-2	7	485-2 A1		14	DRM0/COM
	8	485-2 B1	RS485-1 matching resistor	15/16	RS485-1 matching resistor

Note:

1. When multiple inverters communicate in parallel, a matching resistor should be added to the last inverter by connecting Pin 15/16 together with a cable.
2. COM Port Type 1 or Type 2 is pre-installed on the inverter and delivered randomly. These two types of terminals offer the same performance and differ only in appearance. You need to use the connector with matching shape.

The MAX 150-180KTL3-X series inverter comes with the RS485 port as standard.
Steps to connect the RS485 communication cable:

1> Unscrew the waterproof cover from the COM interface and remove it.
2> Connect the RS485 communication cable to Port 485-1.
3> RS485-1 can be used for parallel communication and export limitation of multiple inverters. RS485-2 can be used for parallel communication and export limitation of a single inverter.
4> Multiple inverters are connected in parallel hand in hand via RS485. Connect 485_A/B of the communication cable to the monitoring device for remote monitoring of multiple inverters.

Note: Tighten the screw for securing the RS485 cable to a torque of 0.4-0.6 N·m (4-6 kgf·cm).

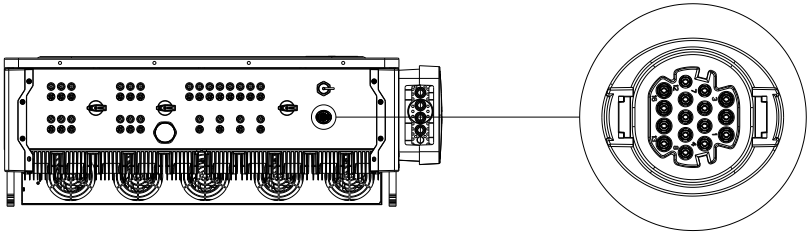

Fig 6.14

6.3.2 USB port

The MAX 150-180KTL3-X series inverter is equipped with the USB interface as standard, which can be connected to a USB to WiFi module, ShineGPRS-X2, ShineWiFi-X, Shine4G-X, Shine Link-X and other optional monitoring modules for remote monitoring. In addition, you can also quickly upgrade the inverter software via the USB flash drive.
Steps to install the monitoring module:

1> Loosen the waterproof cover of the USB interface and remove it.
2> As shown in Figure 6.15A, insert the Shine GPRS-X2 module into the USB interface, and the LED of the Shine GPRS-X2 module will be on.
3> As shown in Figure 6.15B, make sure that the △ is facing upwards, insert the monitoring module into the USB interface, and tighten the lock.

Note:
Considering that the USB to WiFi module is not water-resistant, when the operator leaves, please take the module and the data cable away, and tighten the waterproof cover to prevent water from entering the interface.

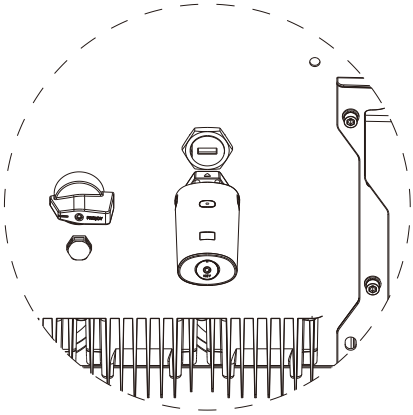

Fig 6.15A

Install

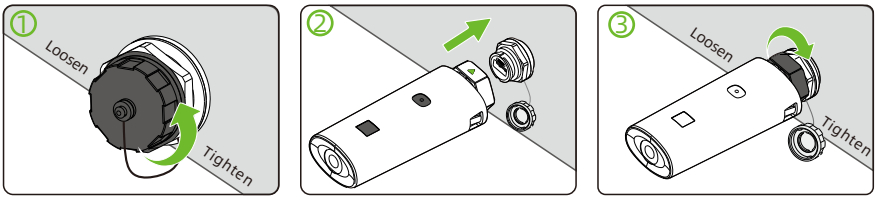

Remove

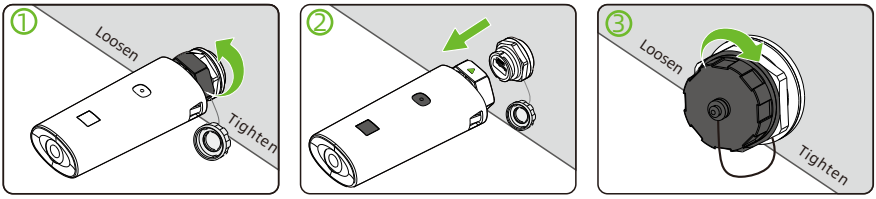

Fig 6.15B

6.4 Inverter demand response modes (DRMS)

The MAX 150-180KTL3-X inverter supports the demand response modes and it is equipped with a 16-pin socket for the DRMs connection.

Information	DRMS application description ➢ Applicable to Commission Regulation (EU) 2016/631. ➢ DRM0, DRM5, DRM6, DRM7, DRM8 are available.
CAUTION	Damage to the inverter due to moisture and dust penetration ➢ Make sure the cable gland has been tightened firmly. ➢ If the cable gland is not mounted properly, the inverter can be destroyed due to moisture and dust penetration. All the warranty claim will be invalid.
WARNING	Excessive voltage can damage the inverter! External voltage supply for the DRM port should not exceed +5V.

6.4.1 Using the Power Control Interface for EU

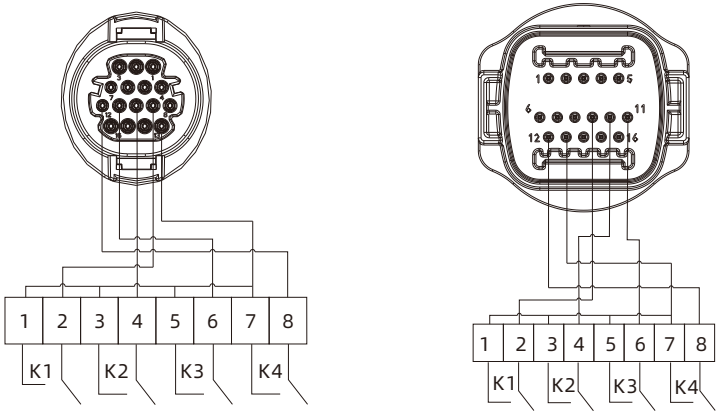

DRM socket1 DRM socket2

Fig 6.18 Inverter - RRCR Connection

6.4.1.1 The following table describes the connector pin assignment and function:

DRM Socket Pin NO.	Description	Connect to RRCR
9	Relay contact 1 input	K1 - Relay 1 output
10	Relay contact 2 input	K2 - Relay 2 output
11	Relay contact 3 input	K3 - Relay 3 output
12	Relay contact 4 input	K4 - Relay 4 output
13	GND	Relays common node
14	Not connected	Not connected

6.4.1.2 The inverter is preconfigured to the following RRCR power levels:

DRM Socket Pin 9	DRM Socket Pin 10	DRM Socket Pin 11	DRM Socket Pin 12	Active power	Cos(φ)
Short circuit with Pin 13				0%	1
	Short circuit with Pin 13			30%	1
		Short circuit with Pin 13		60%	1
			Short circuit with Pin 13	100%	1

Active power control and reactive power control are enabled separately.

6.5 Connect the PE cable

All non-current-carrying metal parts and the enclosures of the devices of the solar power system should be properly grounded.
For the system with a single inverter, connect the PE cable properly. For the system with multiple inverters, connect all inverter's PE cables and the PV array racking to the same grounding point for equipotential bonding.
To ground the MAX 150-180KTL3-X, you need to remove the grounding screw at the bottom and secure the PE cable as the figure shows:

Note:

1. Keep the lightning protection grounding at the greatest possible distance from the protective grounding.
2. You are advised to apply silica gel or paint the grounding screw to protect it against corrosion.
3. Tighten the screw to secure the grounding screw for the enclosure to a torque of 6-8 N·m (60-80 kgf·cm).

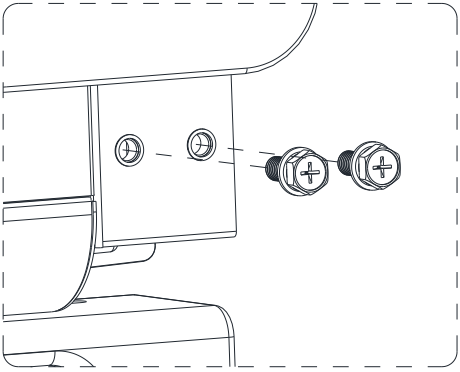

Fig 6.16

According to relevant provisions of IEC 61643-32 "Surge protective devices connected to the d.c. side of photovoltaic installations - Selection and application principles" , whether for household or outdoor photovoltaic power plants, it is necessary to ensure the implementation of lightning protection.

WARNING	The lightning protection measures for photovoltaic systems shall be carried out in accordance with the corresponding national standards and IEC standards. Otherwise, photovoltaic devices such as components, inverters and power distribution facilities may be damaged by lightning. In this case, any consequential damage is beyond the warranty scope and Growatt is not liable for it.

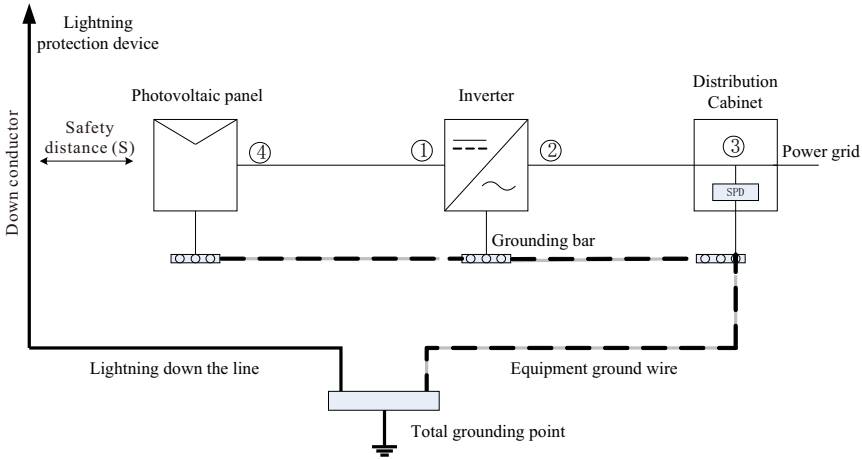

Fig 6.17

1) It is generally recommended to install the SPD (Surge Protection Devices), such as the lightning rod, lightning belt or the down conductor, to prevent the PV array from lightning.
2) Keep a safety distance (S) between the SPD, down conductor and the equipment of the PV system, including the PV panels, inverters, cables and power distribution devices.

Suggested value of S: Take the 5-floor building as an example, which is about 15m in height, the safety distance (S) is suggested to be 2.5 m. The safety distance is inversely proportional to the building height.

A. When the safety distance (S) is met:
SPD should be installed in Position ① and ③. Generally, it is recommended to install Type II in position ① and Type I in position ③.
B. When the safety distance (S) is not met:
In addition to position ③, Type I SPD should be installed in Position ①②④.

3) The down conductor and the PE cables of the devices will come to the total grounding point, but they cannot share the same conductor. You should prepare separate cables for device grounding and the cable specification should be greater than 6 mm2 with the safety distance met.
4) For air-termination system design, please refer to GB/T 21714.3-2015.

7 Commissioning

7.1 Commission the Inverter

	• The inverter might display the wrong time and date if it has been stored for over a month. You need to set the correct time and date before connecting the inverter to the grid. • After the inverter installation is completed and before grid connection, the customer must select the correct country/region grid compliance standard in the settings. If no country/region standard is manually selected, the inverter will default to the VDE0126-1-1 standard after 30 seconds and operate accordingly.

WARNING	• When the grid-tied indicator is solid green (indicating the inverter is in grid-connected mode), do not re-close the DC switch. Otherwise, the inverter may be damaged due to skipped insulation resistance detection.

7.1.1 Set the communication address

After the inverter is powered on, you can set the communication address of the inverter via the RS485 to Wi-Fi module. When multiple inverters are connected in parallel with RS485 hand in hand, each inverter should be set to different communication addresses. For a single inverter, you can retain the default communication address 1.

Note: The communication address of the inverter ranges from 1 to 254.

7.1.1.1 Set the communication address via ShineBus

You can change the RS485 communication address via the upper computer software ShineBus. This operation should be performed by professionals.

7.1.1.2 Set the communication address via ShinePhone APP

Download ShinePhone APP and modify the 485 COM address on the monitoring section referring to Section 8.2 Local data monitoring. This operation should be performed by professionals.

1> Select “Parameters”

2> Enter the Control Password. (Upon initial login, you need to set the Control Password first. On the login page, enter your OSS username and password. The distributor and installer can apply for the OSS account from Growatt. Click "Sign in" to set the Control Password. After that, you can start parameter settings.

3>Click the setting item “COM Addr” ;

4>Click the "Read" button at the upper right corner to read the current communication address of the inverter;

5> Set inverter COM address;

6> Check the inverter COM address to ensure that setting is successful.

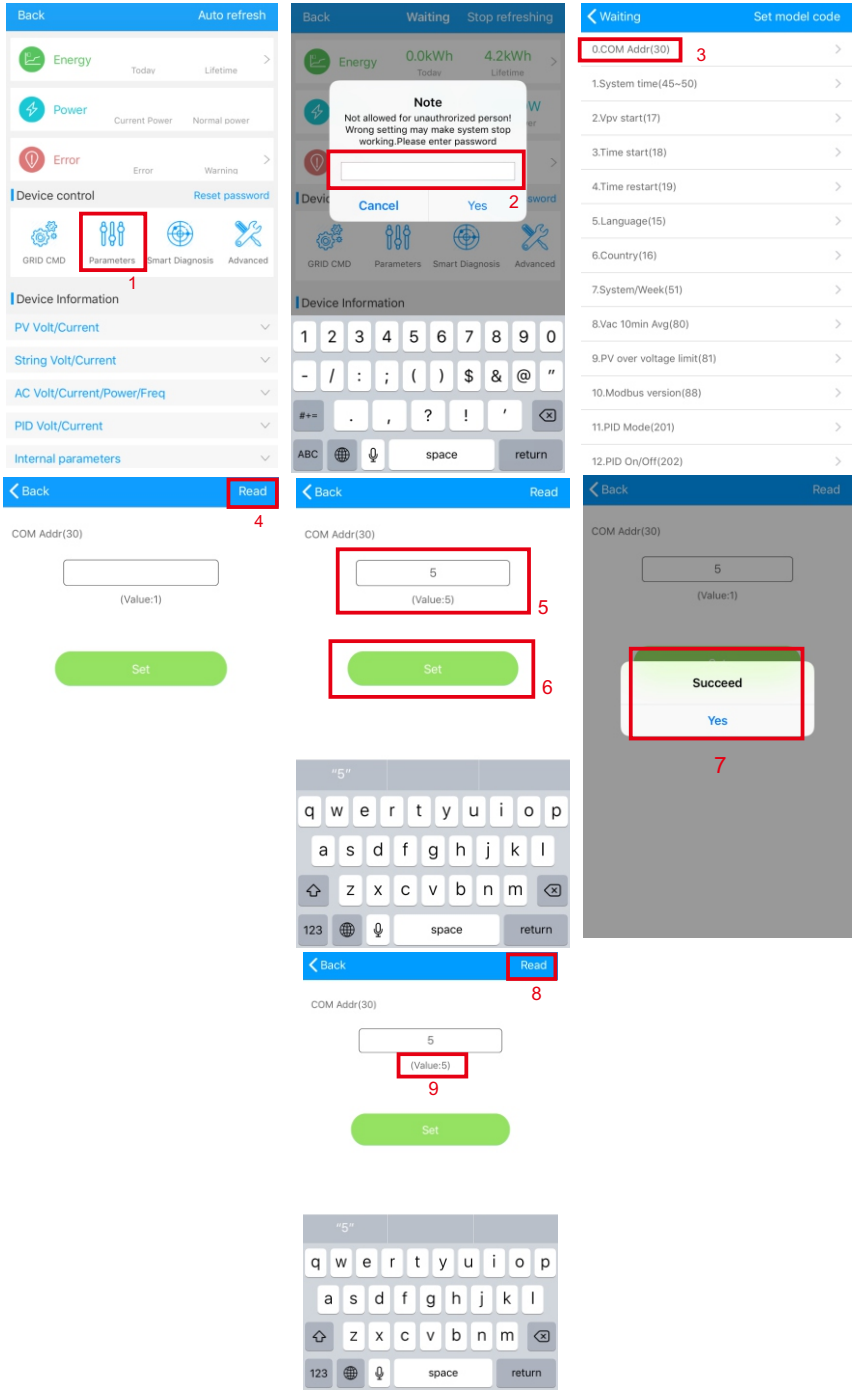
Back
Auto refresh
Energy
Today
Lifetime
Power
Current Power
Normal power
Error
Error
Warning
Device control
Reset password
GRID CMD
Parameters
Smart Diagnosis
Advanced
1
Device Information
PV Volt/Current
String Volt/Current
AC Volt/Current/Power/Freq
PID Volt/Current
Internal parameters
Back
Waiting
Stop refreshing
0.0kWh
4.2kWh
Note
Not allowed for unauthrorized person!
Wrong setting may make system stop working.Please enter password
Cancel
Yes
2
space
return
Waiting
Set model code
0.COM Addr(30)
3
1.System time(45~50)
2.Vpv start(17)
3.Time start(18)
4.Time restart(19)
5.Language(15)
6.Country(16)
7.System/Week(51)
8.Vac 10min Avg(80)
9.PV over voltage limit(81)
10.Modbus version(88)
11.PID Mode(201)
12.PID On/Off(202)
Back
Read
4
COM Addr(30)
(Value:1)
Set
Back
Read
COM Addr(30)
5
(Value:5)
5
Set
6
"5"
space
return
Back
Read
8
COM Addr(30)
5
(Value:5)
9
Set
"5"
space
return
Back
Read
COM Addr(30)
5
(Value:1)
Succeed
Yes
7

Fig 7.1

7.1.2 Set the time and date

Method 1:

Refer to Section 8.2.1 to log into ShinePhone and establish communication between the APP and inverter. Then tap "Parameters" > "System time (45~50)", to set the time and date of the inverter.

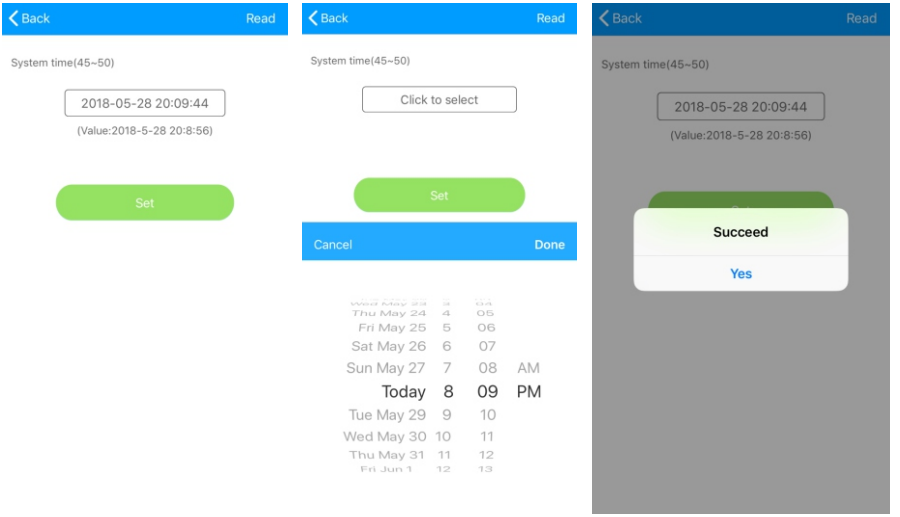

Fig 7.2

7.2 Operation mode

7.2.1 Waiting mode

When the DC voltage is greater than 180 Vdc, the inverter will be powered on and enter the "Waiting" state.

In this mode, the inverter will check the system, parameters. If no abnormality is detected and the PV voltage is greater than or equal to 195 Vdc, the inverter will start to connect to the grid.

7.2.2 Operating mode

In this mode, the inverter works properly. The Power/Fault Code indicator will display the power that the inverter is exporting to the grid. When DC voltage is greater than or equal to 180 Vdc, the inverter will convert the DC power generated from the PV module into AC power and feed I into the grid. When DC voltage is smaller than 180 Vdc, the inverter will enter the "Waiting" state and try to connect to the grid. At this time, it will consume a bit energy for checking system status.

Note: When the power from the PV modules is sufficient (voltage > 195 Vdc) , the inverter will start automatically.

7.2.3 Fault mode

The inverter's intelligent control system will continuously monitor and adjust system status. If any fault is detected, the Alarm/Fault indicator will turn red or flashes red, and the Power/Fault Code indicator will indicate the fault message.
Note: Please refer to Section 9.2 Troubleshooting for details.

7.2.4 Shutdown mode

When the solar power is insufficient or the PV panels are not generating power, the inverter will stop operating. Meanwhile, the LED indicators will be off. In Shutdown mode, the inverter will not consume power from the grid or the PV panels.
Note: When the PV voltage is too low (≤150Vdc), the inverter will enter Shutdown mode.

7.3 LED Display

You can view the inverter's current operating status via the LED display.

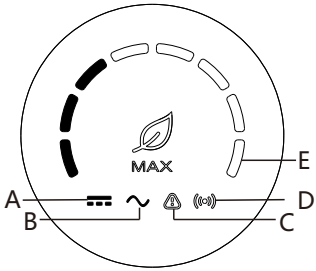

Fig 7.3

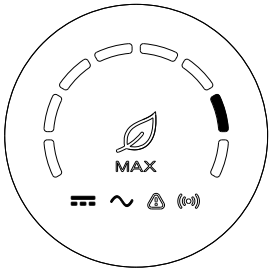

Fig 7.4

Description of LED status			
LED indicator position	LED indicator type	Inverter Status	LED indicator status
A	PV voltage indicator	PV voltage reaches the grid-connected voltage	Steady green
		PV voltage does not reach the grid-connected voltage	Off
B	AC voltage indicator	Inverter is in grid-tied state	Steady green
		No AC voltage	Off
		With AC voltage, the inverter is in grid connection countdown state	Flashes green slowly, and the alarm/fault indicator is off

Description of LED status			
LED indicator position	LED indicator type	Inverter Status	LED indicator status
B	AC voltage indicator	With AC voltage, the inverter is reporting a fault	Flashes green slowly, and the alarm/fault indicator is steady red
C	Alarm/fault indicator	Inverter works normally	Off
		Inverter is in Alarm state	Flashes red slowly
		Inverter is in Fault state	Steady red
D	Communication indicator	External communication is established, such as RS485, GPRS	Steady green
		External communication fails	Off
		Firmware burning for upgrade or USB is reading/ writing data	Flashes green quickly
E	Power and fault code indicator	Inverter is in grid-tied state	The 8 indicators from left to right represent the current power of the inverter: if all 8 green lights are on, it represents 100% power; in Fig 7.3, it represents 37.5% power, and so on.
		The inverter is in a faulty state	The 8 indicators represent the current fault code reported by the inverter, from right to left, they represent 1, 2, 4, 8, 16, 32, 64, 128: if the first and fourth LEDs from the right are steady green, it denotes 1+8=9, and then, plus 200 to get 209, indicating that the inverter has reported the fault code 209, and so on.

Monitoring 8

8.1 Remote Data Monitoring

MAX 150-180KTL3-X series inverter remote monitoring ways include APP(ShinePhone) and server Web page, RS485,GPRS,4G,PLC(reserved) can satisfy both ways of monitoring.

8.1.1 Mobile phone APP(ShinePhone) remote monitoring

1> Scan the following QR code, or download from Android store or App store by searching “Shinephone” , download and install software.

Fig 8.1

Note: 1.Make you it's the latest version.

2.Please find more details on http://server.growatt.com.

2> Users can register their mobile APP account by following the steps below: Run ShinePhone, go to login page, click "register” .Registration is required to fill in the information, with the * is required, the agreement is mandatory, you can log in to the main interface of ShinePhone after registration, the registration page and the main interface are as shown below.

Shinephone login and main page:

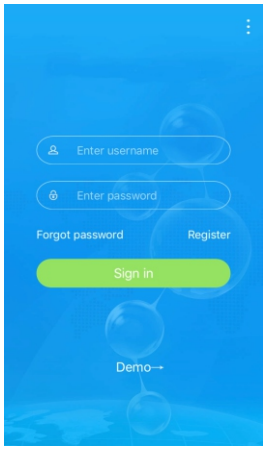

Fig 8.2

Fig 8.3

Device page:

1>Main page top middle is the name of current plant, user can click the "V" button to switch to other plants under this account.

2>User can add datalogger,check datalogger and add plant by click “+” button at the top right corner.

3>Top half shows current plant power, revenue today and total production.

4>My device list shows current plant device, user can see more details by click the device, left cross the device to stick the device and edit, edit operation includes change device alias, icon,and delete device.

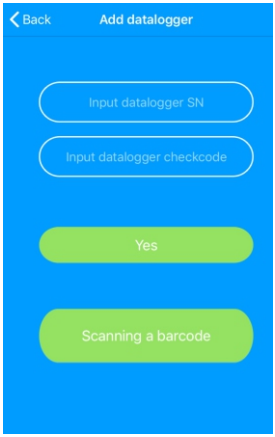

Fig 8.4 add datalogger

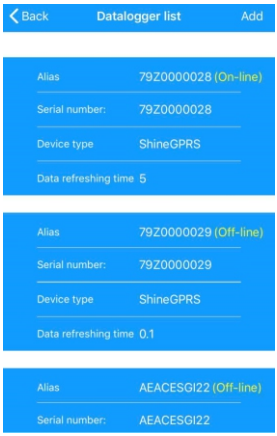

Fig 8.5 datalogger list

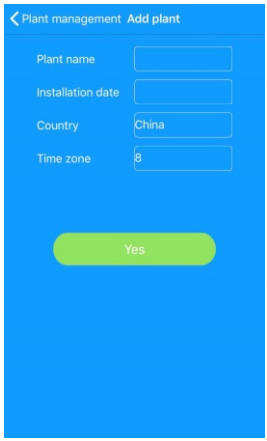

Fig 8.6 add plant

Datalogger:

1>User can add more datalogger under the particular plant.

Way: Click “+” in the upper right corner of the device page and select “Add Collector (WiFi/GPRS, etc.)” , as shown in Figure 8.7.

Note: You can choose to manually enter the collector serial number for addition, or you can add it by scanning the barcode on the nameplate.

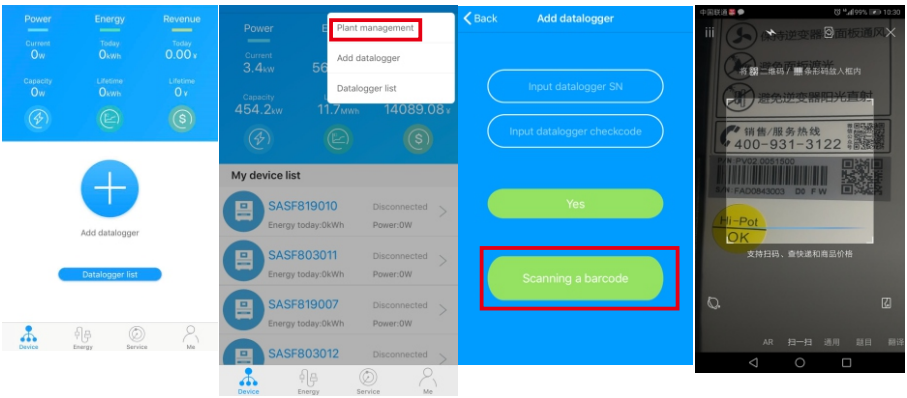

Fig 8.7

2>User can add datalogger at the datalogger list page to add a datalogger, edit, delete, configure etc.
3>User can add more plants with the add Plant function.

Device page and function:
1>Device page: User can click the device to see more details, the device page show current power and Energy today and daily power chart, user can find more with control,parameter, data and Events page.
2>Control: user set inverter on/off, set active power, set reactive power, set PF, set inverter time, set grid voltage high, set grid voltage low. The operation password is: inverter+date, for example inverter20170722.
3>Parameter: user can see device SN, rated power, firmware version, PV1 voltage, current, and power etc.

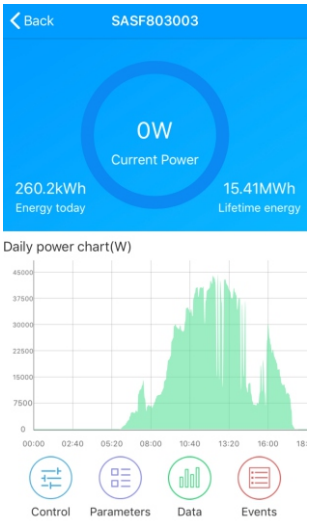

Fig 8.8

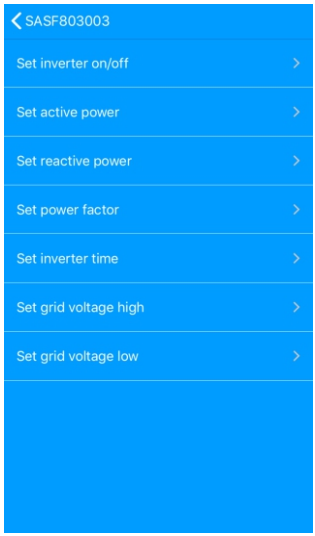

Fig 8.9

Fig 8.10

4>Data page: user can see the PV power, voltage, current, R phase power, S phase power, S phase power, T phase power, output power by day, month, year, by finger up cross the screen.
5>Events: User can see the fault message if there it is.

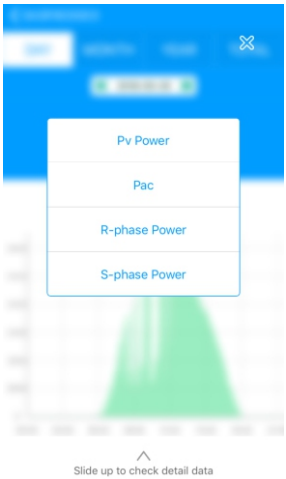

Fig 8.11

Fig 8.12

8.1.2 GPRS /4G

8.1.2.1 Register account

1>Register account

Open browser, input "server.growatt.com" , click "New User" at login page, input the necessary information then go back to login page, input the registered username and password, click "Sign In" .

Fig 8.13

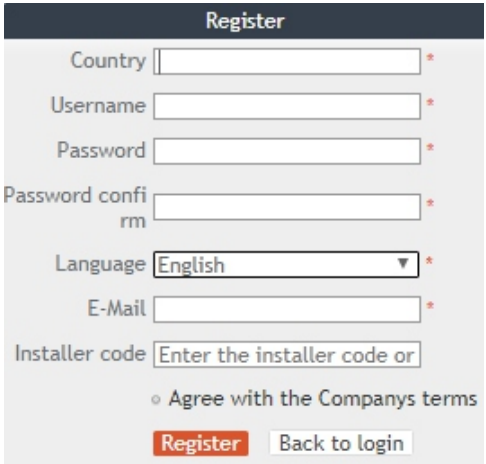

Fig 8.14

2>Add datalogger

At Plant page, click device manage, then click add datalogger, input the SN and valid code then save, after device is powered on, datalogger will show after 5mins, also the device will come online(our device is monitored by datalogger, so need to add the datalogger here first).

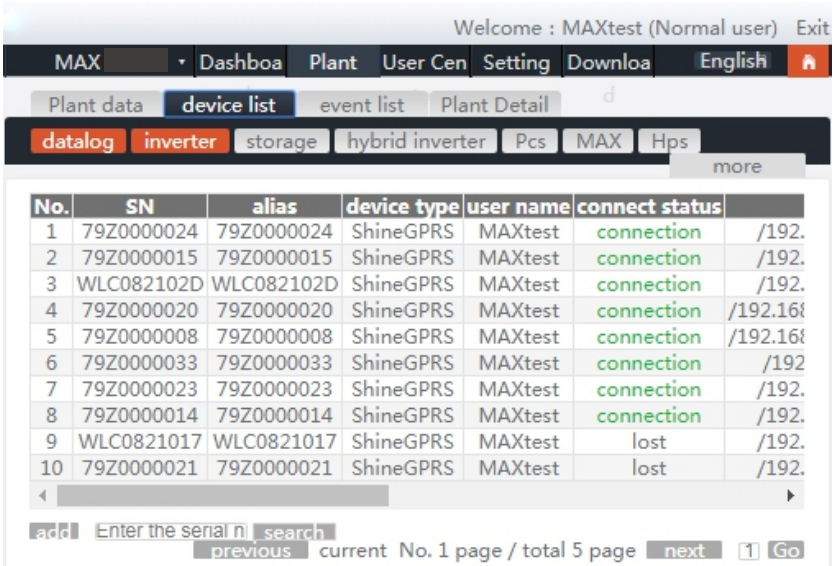

Fig 8.15

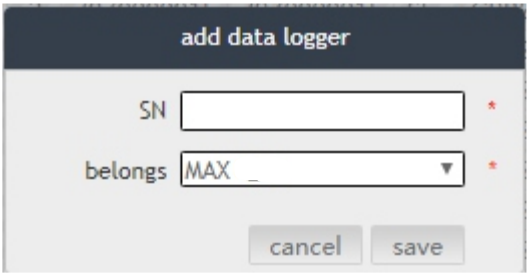

Fig 8.16

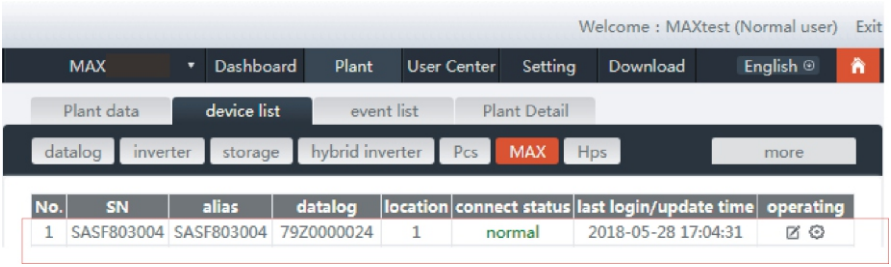

Fig 8.17

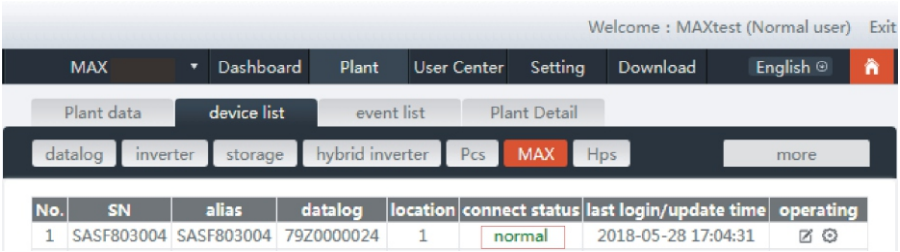

Fig 8.18

3> Data reading

A.Basic production reading, Energy today, total production, revenue today and accumulative revenue are showing on this page.

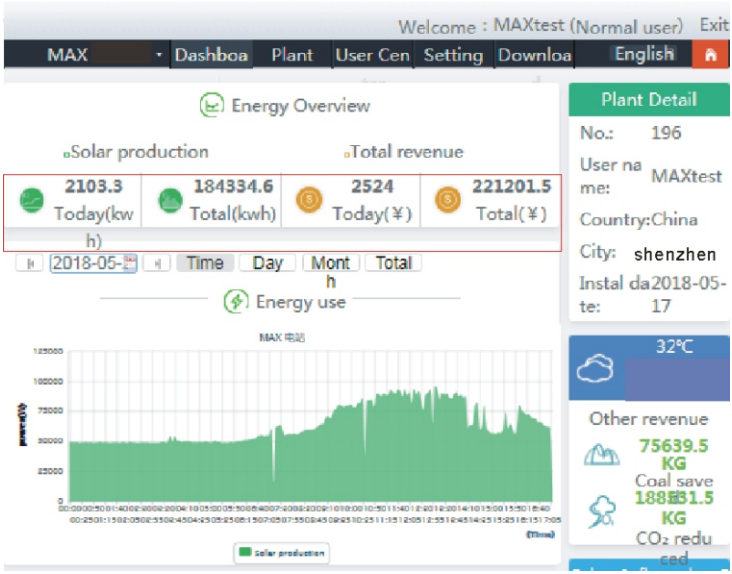

Fig 8.19

B. Plant data page can check device power, voltage curve by time, day, month or year.

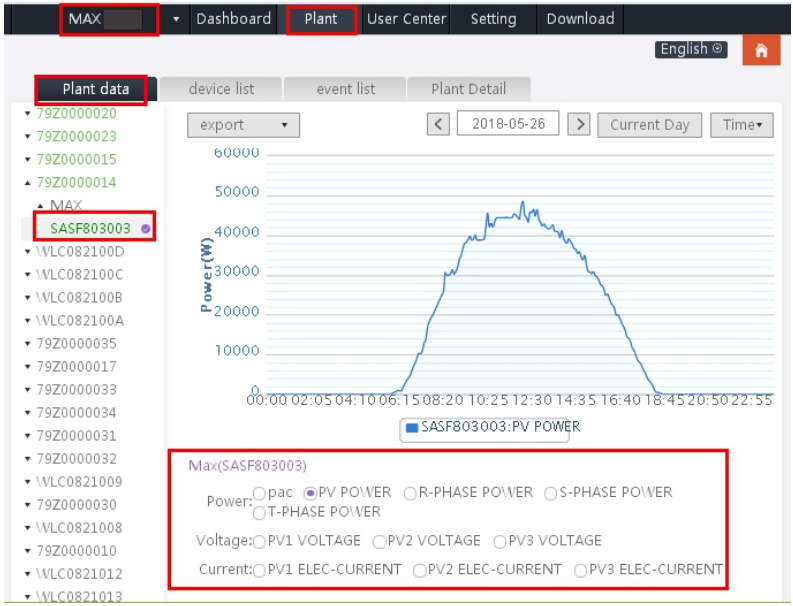

Fig 8.20

4>Set up the equipment

The device management page selects MAX. The serial number of the device to be set can be found in the list.

Notice: The following operations are requested by professionals.

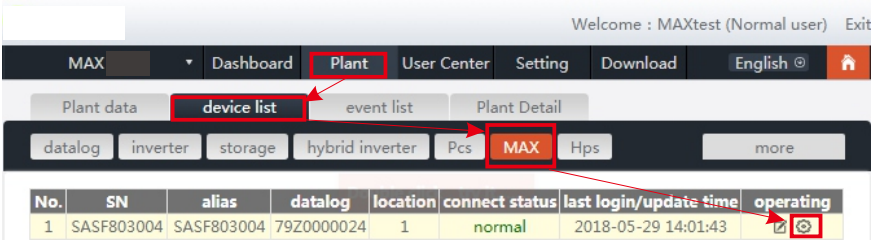

Fig 8.21

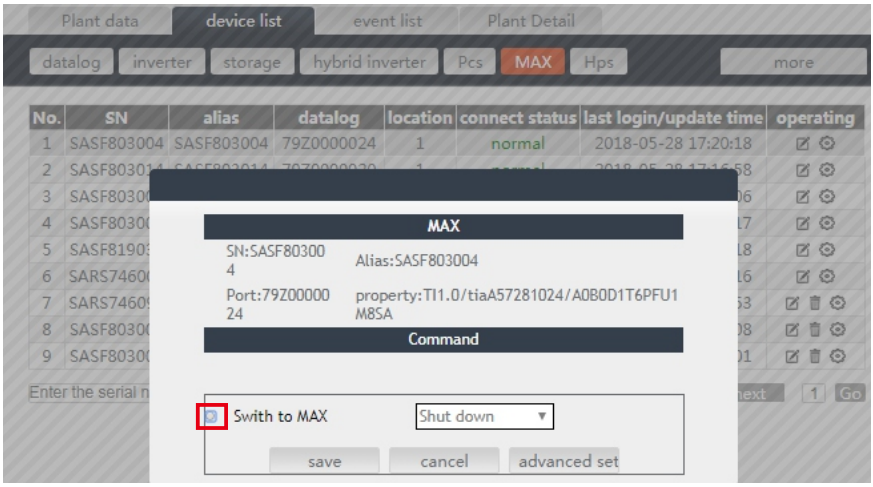

Fig 8.22

5>Check detailed data

Double-click the device serial number in the device list. The detailed data page is displayed. Data pages can be viewed by date or exported.

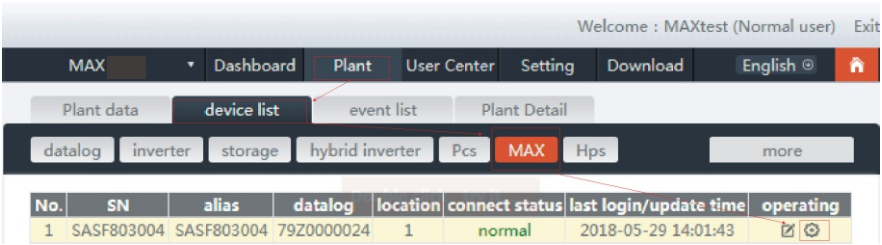

Fig 8.23

History Data start date 2018-05-2 end date 2018-05-2 search export

No.	Serial number	Time	Status	EacToday(kWh)	EacTotal(kWh)	Vpv1(V)	Vpv2(
1	SASF803004	2018-05-28 17:22:30	Normal	235.6	1341.0	542.6	609.0
2	SASF803004	2018-05-28 17:22:23	Normal	235.6	1341.0	543.4	611.9
3	SASF803004	2018-05-28 17:22:16	Normal	235.6	1341.0	552.7	612.8
4	SASF803004	2018-05-28 17:22:10	Normal	235.6	1341.0	549.4	617.2
5	SASF803004	2018-05-28 17:22:05	Normal	235.6	1341.0	541.8	619.9
6	SASF803004	2018-05-28 17:21:59	Normal	235.6	1341.0	543.6	619.2
7	SASF803004	2018-05-28 17:21:53	Normal	235.6	1341.0	542.5	622.5
8	SASF803004	2018-05-28 17:21:48	Normal	235.6	1341.0	537.0	615.8
9	SASF803004	2018-05-28 17:21:40	Normal	235.6	1341.0	537.1	619.2
10	SASF803004	2018-05-28 17:21:35	Normal	235.6	1341.0	540.3	624.9
11	SASF803004	2018-05-28 17:21:29	Normal	235.5	1340.9	549.9	618.2
12	SASF803004	2018-05-28 17:21:26	Normal	235.5	1340.9	544.2	608.8
13	SASF803004	2018-05-28 17:21:17	Normal	235.5	1340.9	543.9	618.6
14	SASF803004	2018-05-28 17:21:09	Normal	235.5	1340.9	543.3	614.4
15	SASF803004	2018-05-28 17:21:05	Normal	235.5	1340.9	545.9	616.5
16	SASF803004	2018-05-28 17:21:00	Normal	235.5	1340.9	544.9	617.6
17	SASF803004	2018-05-28 17:20:55	Normal	235.5	1340.9	549.1	619.0

close

Fig 8.24

8.1.2.2 Shinemaster monitoring

This is a cost-effective and compact monitoring device that is specially designed for solar power plants, with a high-speed CPU and a stable Linux system that intelligently records the user's system characteristics.

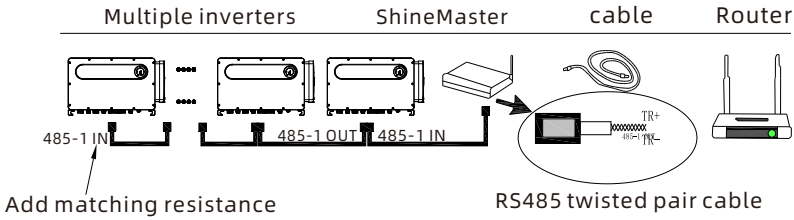

Feature:
1> A versatile and high-performance communication data logger that notifies the user of system status at any time.
2> Flexible parameter setting, system information management, error prompting and recording, high-capacity storage.
3> Collect data and upload data to Growatt in real time over the network.
Note: The smart meter and environmental monitor must be Growatt's designated manufacturer, otherwise monitoring will not be possible. When RS485 of multiple machines is used in parallel, please connect the ground wire according to section 6.3.1.

The system framework of communication monitoring is shown in the figure below. Users can choose the most suitable monitoring method according to the actual situation.

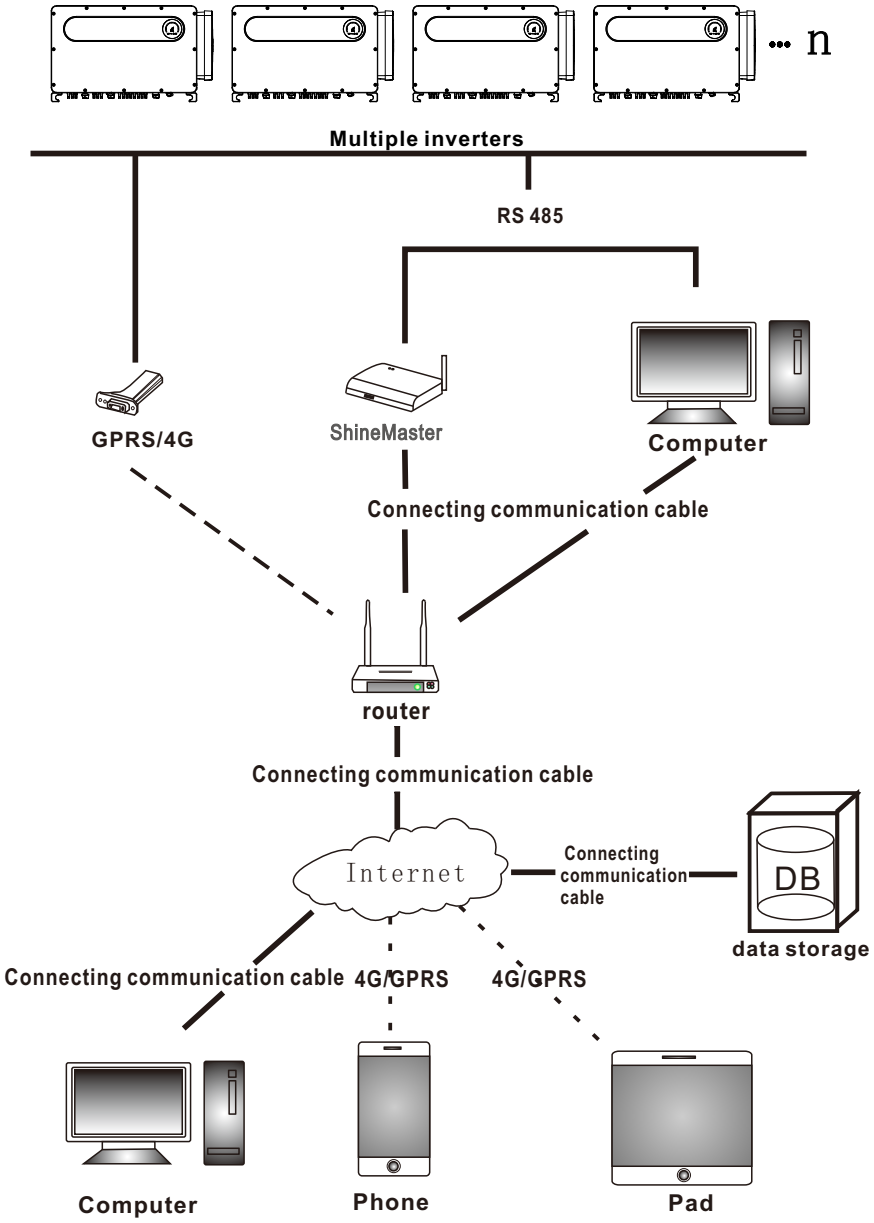

1> ShineMaster IP Address query
A. The PC and shinemaster lan ports are connected to the router's port through the network cable, so that they are in the same local area network.
B. Go to the router's management page and check the "Internet host list" to query the IP address of the ShineMaster serial number as the name of the connected device. This IP is the IP address assigned by the router to the ShineMaster. If you do not know how to do this, contact your network administrator for operation.
Note: The router needs to enable automatic IP assignment, that is, open the DHCP function.
C. Enter the shinemaster IP address in the browser to enter the shinemaster built-in page.

2> ShineMaster Built-in page access
Before accessing, check whether the communication cable between the devices is securely connected. After the check is correct, you can enter the ShineMaster IP address in the IE browser to access the built-in page of the ShineMaster. As long as the ShineMaster is on the same network segment as the computer you are accessing, you can access the ShineMaster built-in server.
A. If the user successfully visits the shinemaster built-in page, they can go directly to the built-in page login interface, as shown in figure 8.25 below.

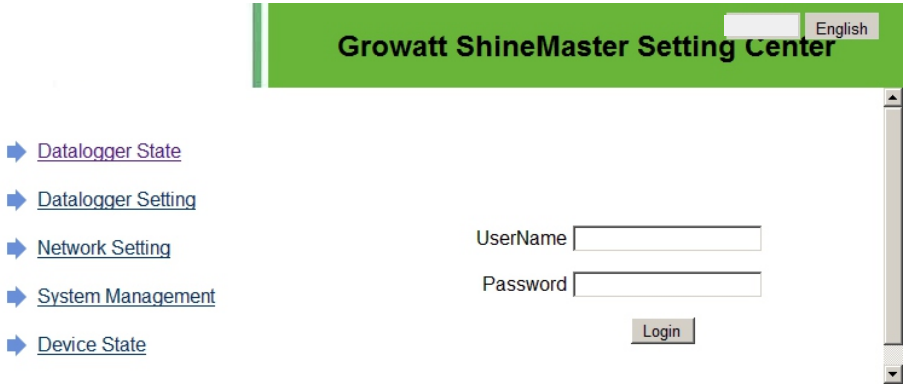

Fig 8.25

B. Enter user name and password, default login username: admin password: admin. click login after filling in, enter growatt shinemaster system page.

3> ShineMaster Data collector status view
Click on the status of the shinemaster data collector to view shinemaster"system state information", "serial number," server address, "number of connected devices," and so on.

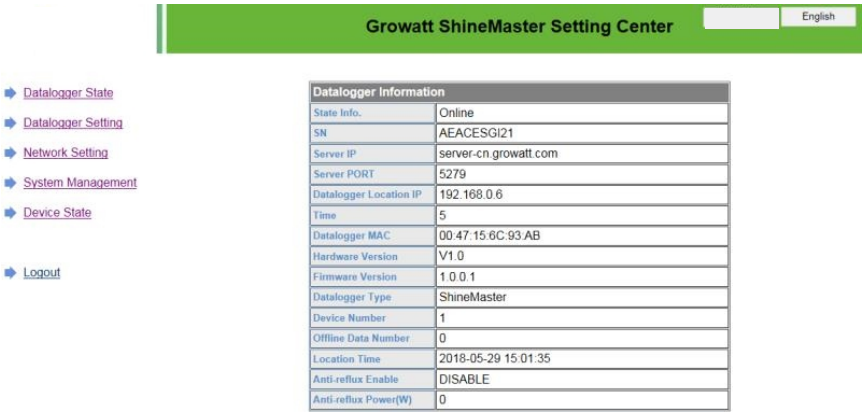

Fig 8.26

4> ShineMaster Data collector add or delete device

ShineMaster Before monitoring photovoltaic devices, we need to enter the page of the built-in shinemaster data collector settings to add devices.

A. Add device

1) Select the monitoring mode for monitoring photovoltaic devices in the first drop-down list of add or remove devices.

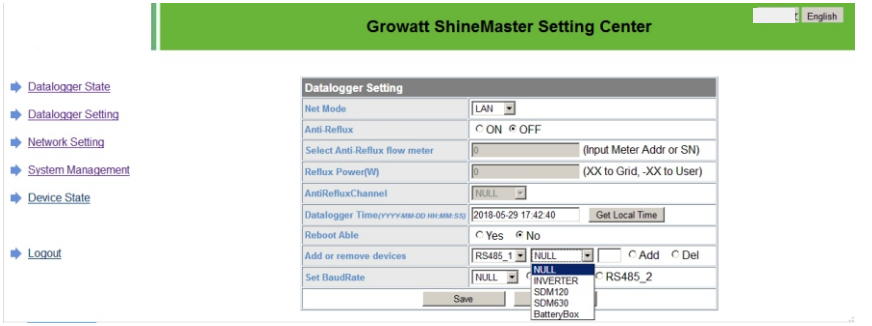

Fig 8.27

2) Select the type of photovoltaic device monitored in the second drop-down list.

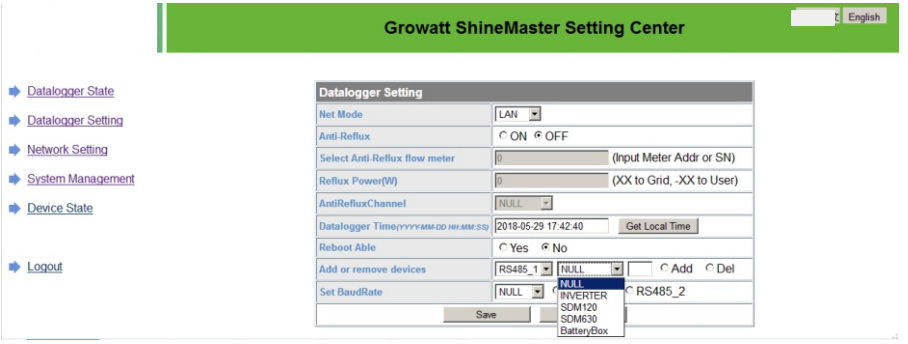

Fig 8.28

3) Fill in the third drop-down list with the photovoltaic device correspondence address.

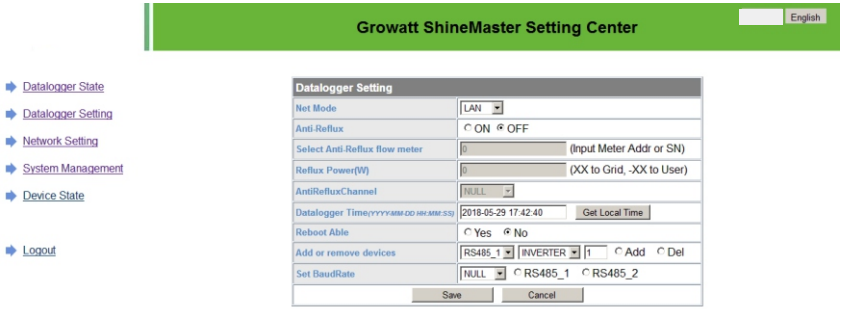

Fig 8.29

4) Select "Add" and then click "Save".
5) Go to the device status page after saving success to confirm that the device was added successfully.

Fig 8.30

B. Delete device
1) Select the first drop-down list of "add or remove devices" to monitor the monitoing mode of photovoltaic devices.
2) Select the type of photovoltaic device monitored in the second drop-down list.
3) Fill in the third drop-down list with the photovoltaic device correspondenc address.
4) Select the following "del" and click Save to complete the device addition.
5) Enter the device status page after successful save to confirm that the device was deleted successfully.

5>ShineMaster Data upload to ShineServer
A. Register:Login
1) Enter the server domain name in the computer browser to enter the shineserver login page, if you are logged in for the first time, please register the user name. Enter the domain name access page, as shown in figure 8.32 below.
Chinese user server domain name:http://server-cn.growatt.com.
The domain name of the international user server is:http://server.growatt.com.

Fig 8.31

2) Register user name, input user information according to prompt, after information is completed, click "register".
Note: "collector serial number" and "collector check code" see shinemaster serialnumber box or guarantee box.

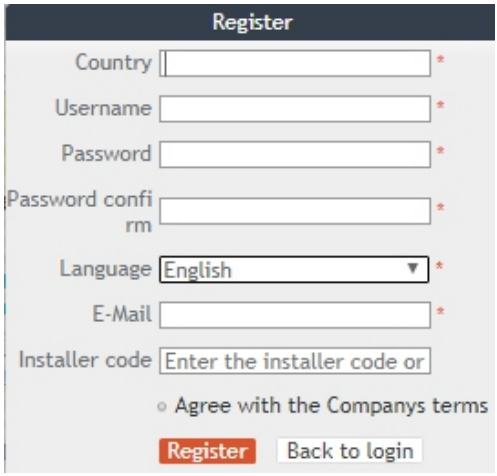

Fig 8.32

B. View monitoring data

1) After registration is complete, jump to the shineserver main interface automatically. Click on "power station" and "work information" to display the information for the power station's total power flow chart on the same day. The drop-down list "Select collector" allows you to view the daily power flow chart of a single inverter for the power station.

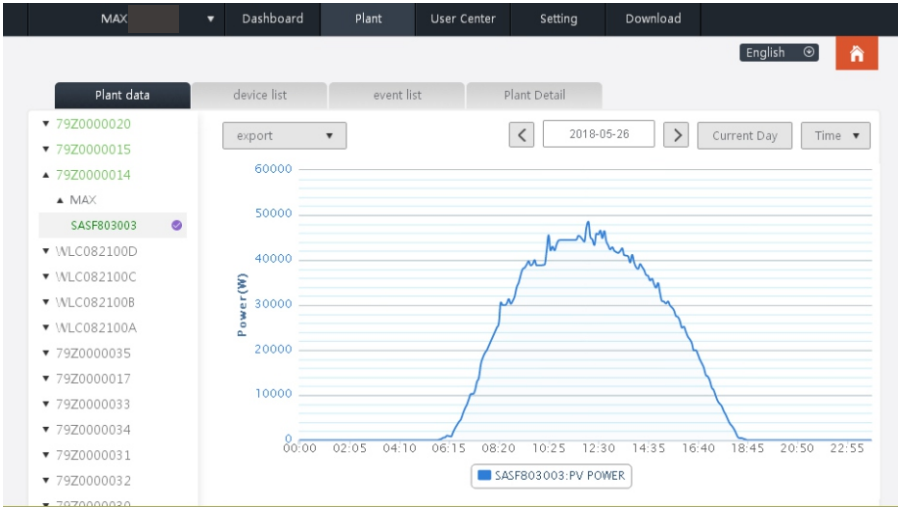

Fig 8.33

2) By clicking on "power station" and "equipment management" in turn, the real-time data of "data collector", "inverter", "environment monitor", "intelligent meter" and "confluence box" MAX "can be viewed.

8.2 Local Data Monitoring

MAX 150-180KTL3-X series Inverter local data monitoring mode has a mobile phone app phone) and PC direct connection, udisk, details are as follows.

8.2.1 Mobile phone app (Shinephone) Local Monitoring

8.2.1.1 Log on to app for local monitoring

Method 1

When you open the app login front page, click the top right corner toolbox icon. Pop up the toolbox, click the local debugging tool, and you can get the wifi name of the collector by scanning the QR code or barcode(The default password for WIFI is 12345678. If you have already connected, you can click "Skip" to connect directly to the WIFI.)

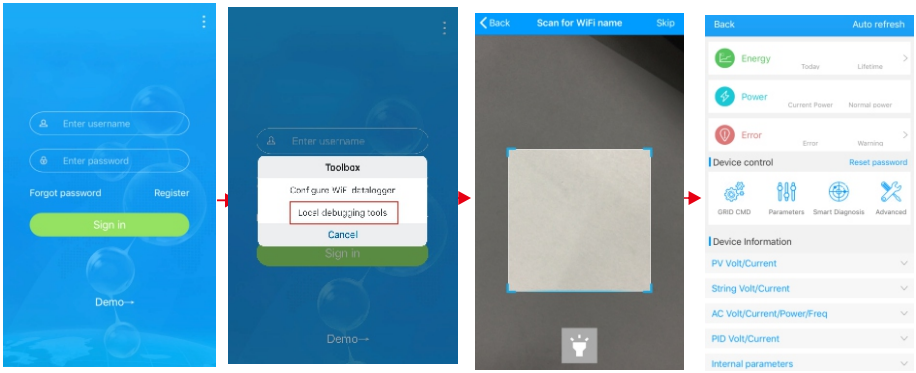

Fig 8.34

Method 2

Open app enter user name and password click login, enter me (personal center). Click the enter tool, find the local debugger to enter, and you can get the wifi name of the collector by scanning the QR code or barcode(The default password for WIFI is 12345678. If you have already connected, you can click "Skip" to connect directly to the WIFI.)

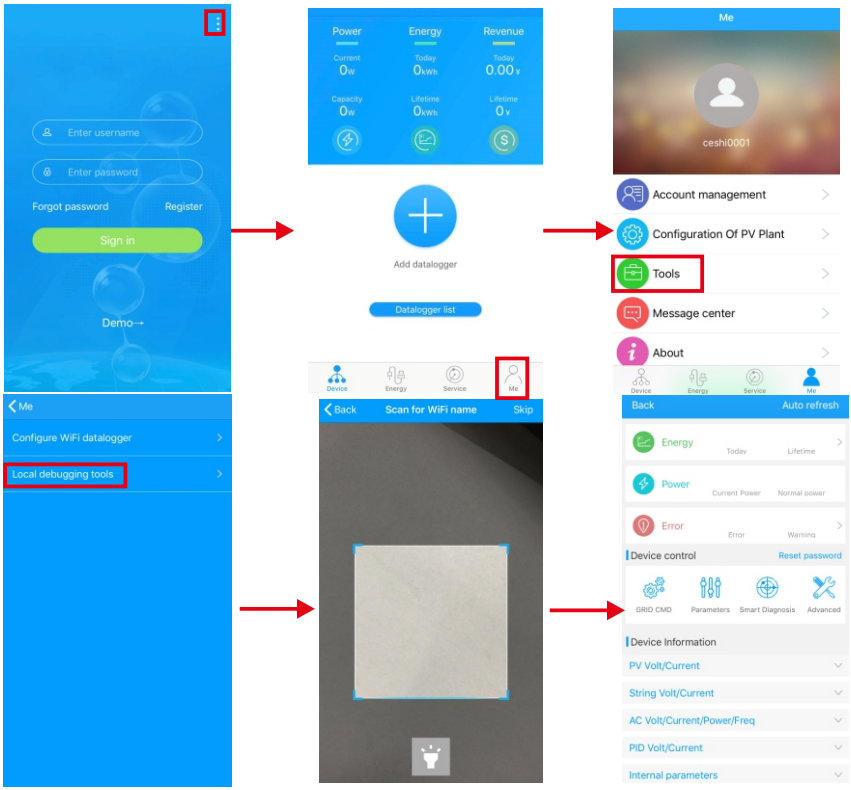

Fig 8.35

8.2.1.2 Use of local monitoring and debugging

When viewing local monitoring, you must keep the phone's wifi connected to the collector's wifi to view local monitoring (to enter the local monitoring page, first click auto refresh to get the latest data information).

Electricity generation: the option to view the latest generation, daily generation, monthly and annual generation of detailed information;

Power: you can see the current power and rated power value; failure: can read the equipment detailed fault information.

1> device control

Note: In addition to resetting the password to connect to the network, other WIFI modules that must connect to the collector can view information.

A. Reset password

Need network connection login oss account to set up or modify the local debug password.

B. Setting configuration

The configuration data of inverter, voltage, power and so on can be modified according to the usage (Fig 8.36).

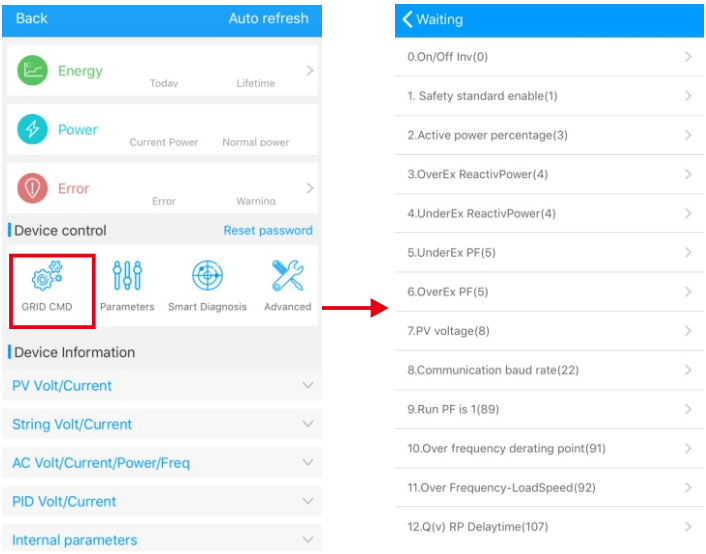

Fig 8.36

C. Parameter configuration

The parameter data of the equipment can be modified according to the usage (Fig 8.37).

D. Intelligent detection

Detailed and accurate view of the device's detailed data and status (Fig 8.38).

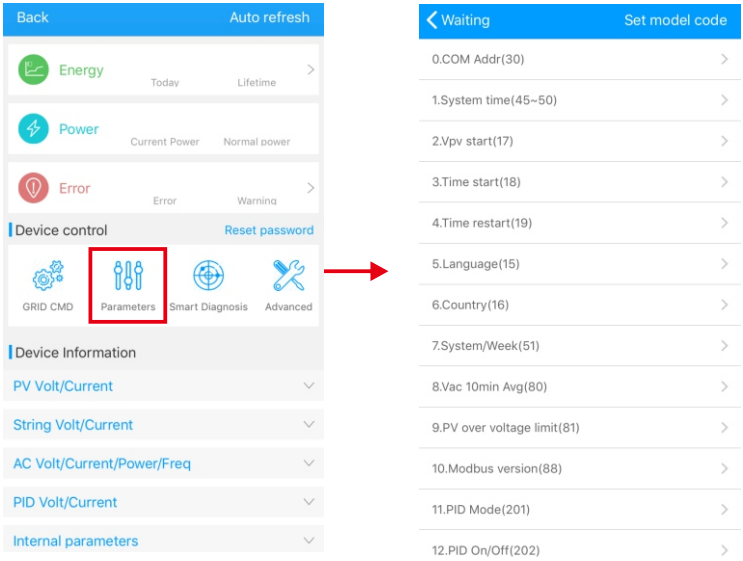

Fig 8.37

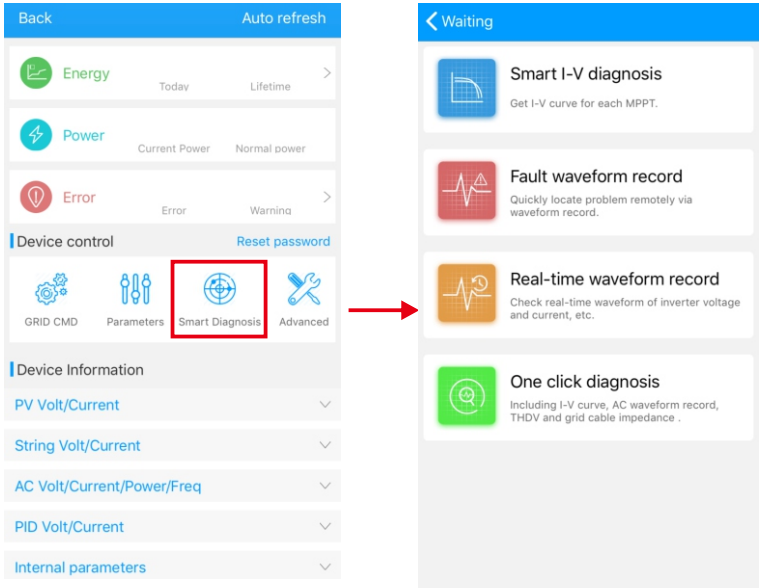

Fig 8.38

E. Intelligent I-V curve scanning

Can remotely scan each mppt (Fig 8.39).

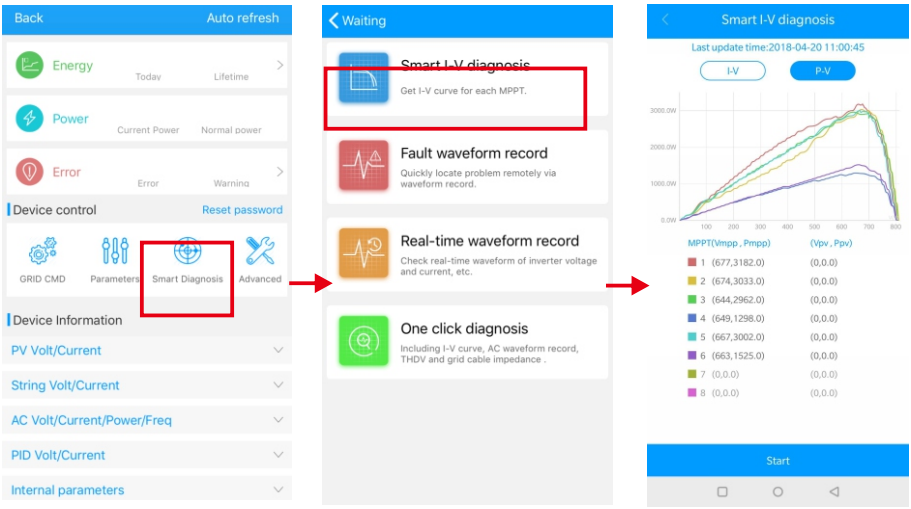

Fig 8.39

F. Fault recording detection

Remote, fast and accurate fault location (Fig 8.40).

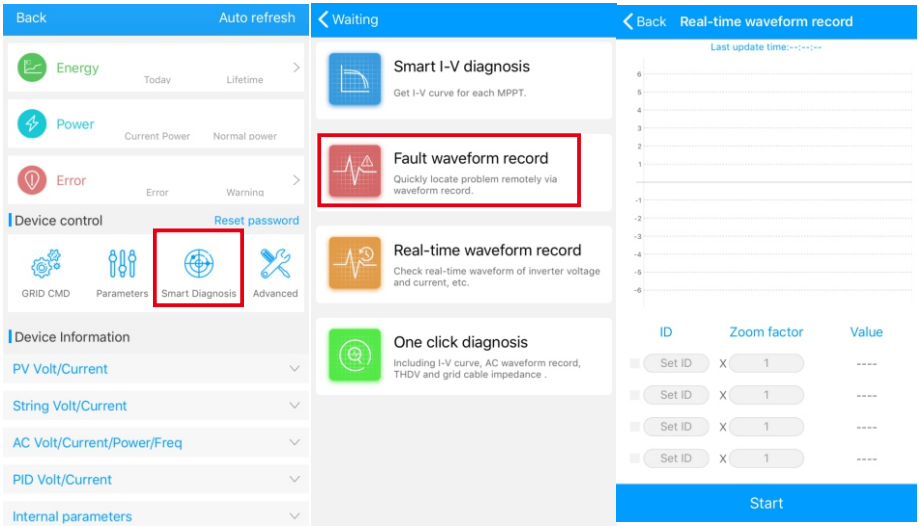

Fig 8.40

G. Real-time recording detection

Inverter voltage and current quality can be observed in real time (Fig 8.41).

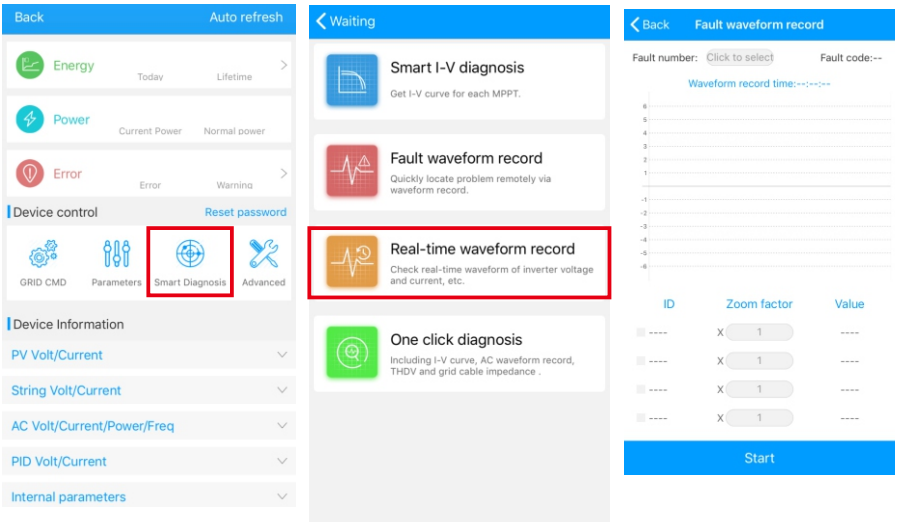

Fig 8.41

H. One click diagnosis

I-V curve diagnosis, grid waveform, THDV and cable impedance detection all at one click(Fig 8.42).

I. High level setting

According to the register address set parameters (professionals).

J. Device information

Check PV voltage/current, string voltage/current, AC voltage/current/power/frequency, PID voltage/current, internal parameters and device detail information and parameters (Fig 8.43).

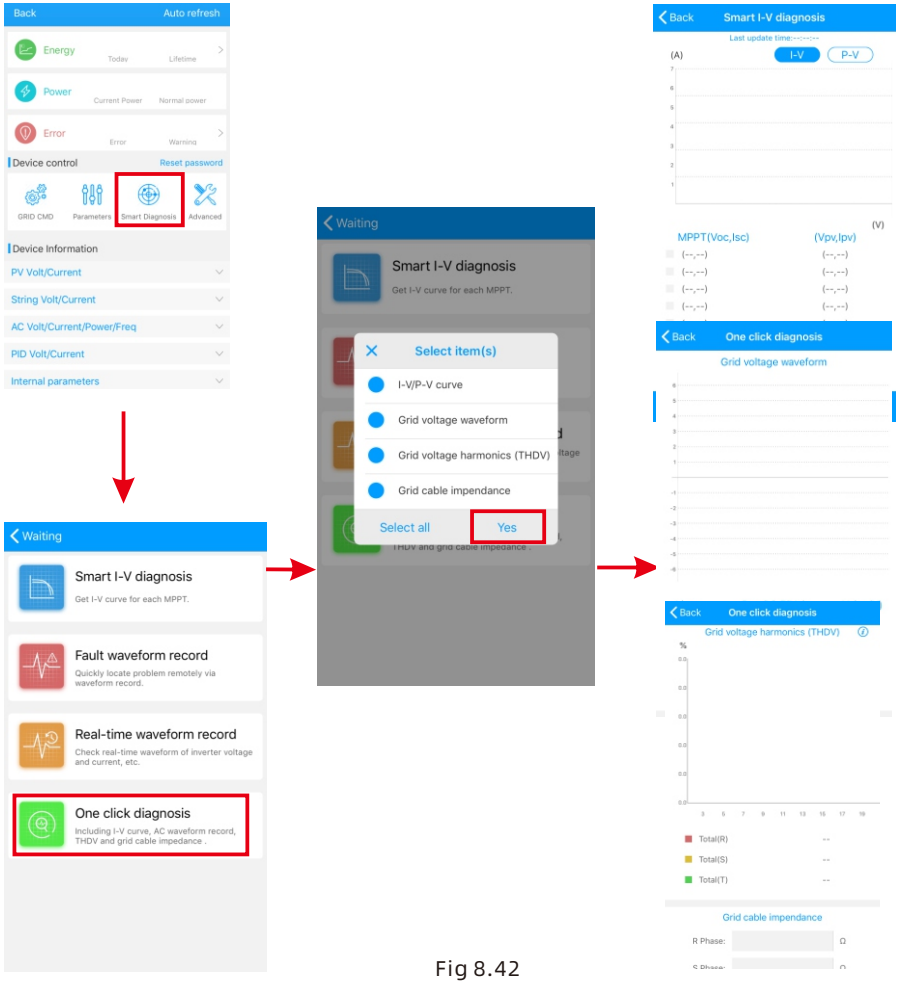

Fig 8.42

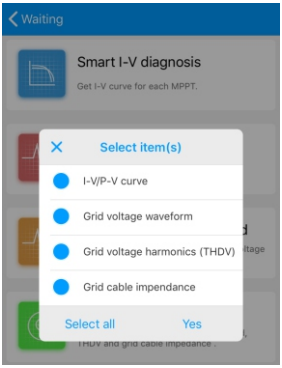

Fig 8.43

8.2.2 U Disk Monitoring

Refer to 6.3.2 USB to WIFI/ U disk communicate connection, the local monitoring of U disk can realize the functions of software burning, fault recording, curve analysis and realtime recording. Details are as follows:

1> Firmware Programming

Create the bconfig.txt file under the root of the U disk, write to the following content, then insert the U disk to programming. Note the M3 program needs to be programming at last time.

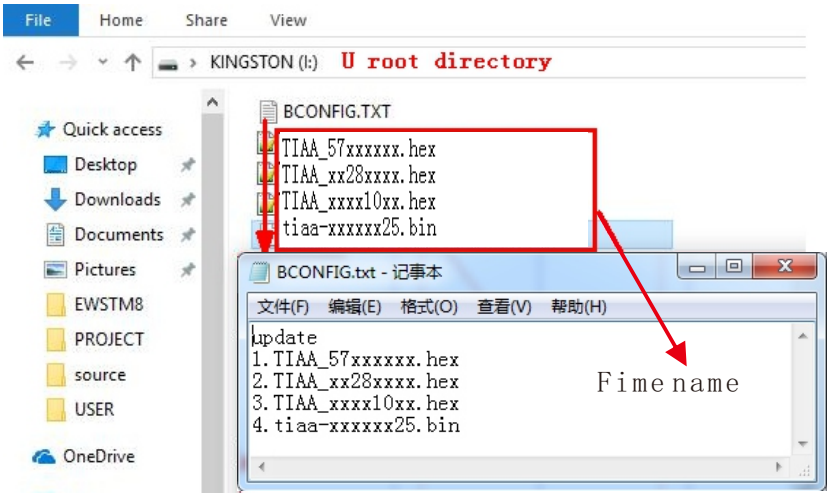

Fig 8.44

2> Fault Recording

Create the bconfig.txt file under the root of the U disk, write the following content, then insert the U disk that can be read fault information, then generates a form under the files in the root directory, A total of 60 fault recording information is stored, the latest Numbers is 0.

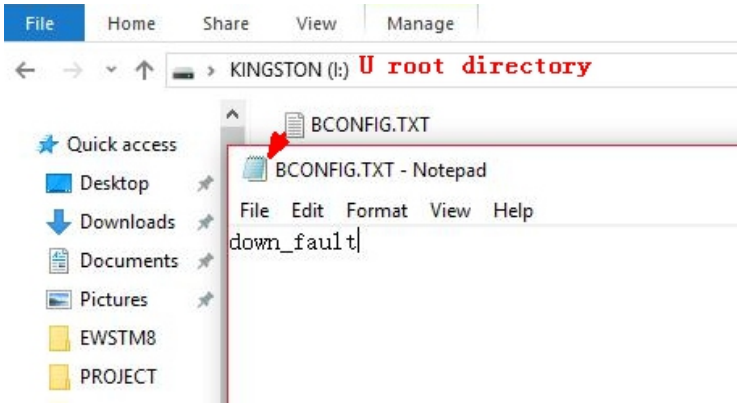

Fig 8.45

3> Curve Analysis

Create the bconfig.txt file under the root of the U disk, write the following content, the insert U disk to record I-V curve, then generates a form under the files in the root directory.

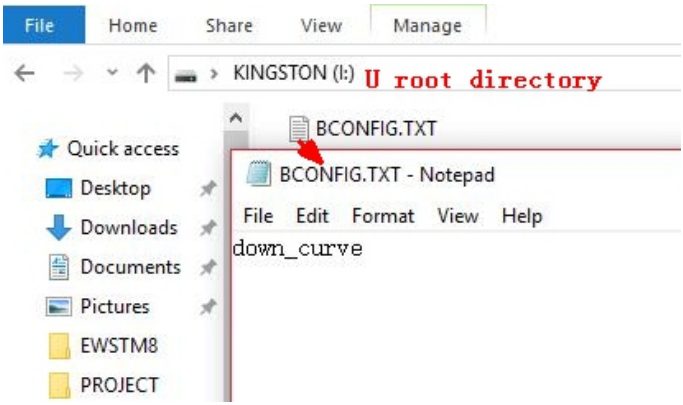

Fig 8.46

4> Real Time Recording

Create the bconfig. txt file under the root of the U disk, write the following content, then insert U disk to read real time recording information, then generates a form under the files in the root directory, the form record's waveform is consistent with the ID of the command setting.

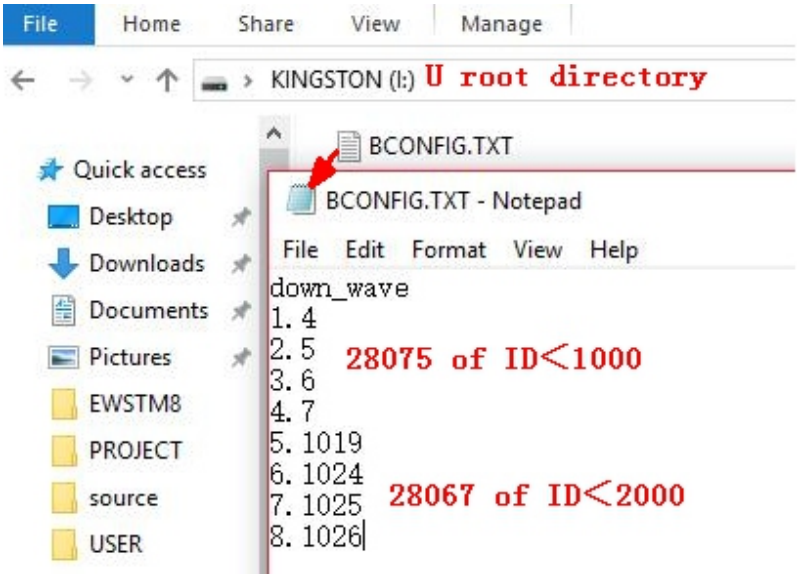

Fig 8.47

System Maintenance 9

9.1 Routine Maintenance

9.1.1 Clean the Inverter

DANGER	• Before performing any work, wait at least 5 minutes after turning off the DC switch and AC breaker to let the capacitors discharge.

1> Check the ambient temperature and dust of the inverter, clean the inverter when necessary.
2> Observe whether the air outlets is normal, when necessary, clean the air outlets or clean the fan step by step, steps refer to 9.1.2.
3> Check for dust accumulation or blockage in air vents and heat sinks. Clean if necessary.

Inspection Items	Inspection Methods	Maintenance Cycle
Equipment Cleaning	Check for dust accumulation or blockage in air vents and heat sinks. Clean if necessary.	1Once every 6-12 months (adjust to 3-6 months in dusty /fibrous environments).
Fan	Check for abnormal noise during fan operation. Inspect fan structure for cracks. Replace if necessary. Check for dust accumulation or blockage. Clean if needed.	1 time/year
Clear Vegetation Around Inverter	Remove weeds and perform cleaning based on local vegetation growth/withering. Prevent weed accumulation around inverter.	Adjust frequency based on vegetation growth around inverter.

9.1.2 Clean the fan

DANGER	• All operations must be performed by trained and professional electricians, and all instructions specified in this manual should be observed. • Before performing any work, wait at least 5 minutes after turning off the DC switch and AC breaker to let the capacitors discharge.
WARNING	• Do not use the air pump cleaning fan, which may cause fan damage.

When the inverter is operating in high-temperature environment, proper heat dissipation and ventilation is essential to avoid power de-rating. The inverter comes with built-in fans. When the internal temperature gets excessively high, the fans will work to lower the temperature. For de-ratings caused by over-high temperature, possible causes and measures are listed below:

1) Fan is blocked or the heat sink gathers too much dust. You need to clean the fan, fan guard or heat sink.
2) Fan is damaged. You need to replace the fan.
3) Poor ventilation condition in the installation location. You need to select the appropriate installation location according to the basic installation requirements.

Dust Filter and Fan Cleaning/Replacement Steps:

1> Before cleaning or replacing the dust filter/fan, ensure the inverter is completely disconnected from both DC and AC power sources.

1) Turn off DC switch.
2) Disconnect DC terminals from inverter(Users need tools to disconnect the DC connection terminals).
3) Turn off AC breaker.

2> Replacing the Dust Filter.

1) Use a Phillips screwdriver to remove the screws securing the fan mounting plate (see diagram below).

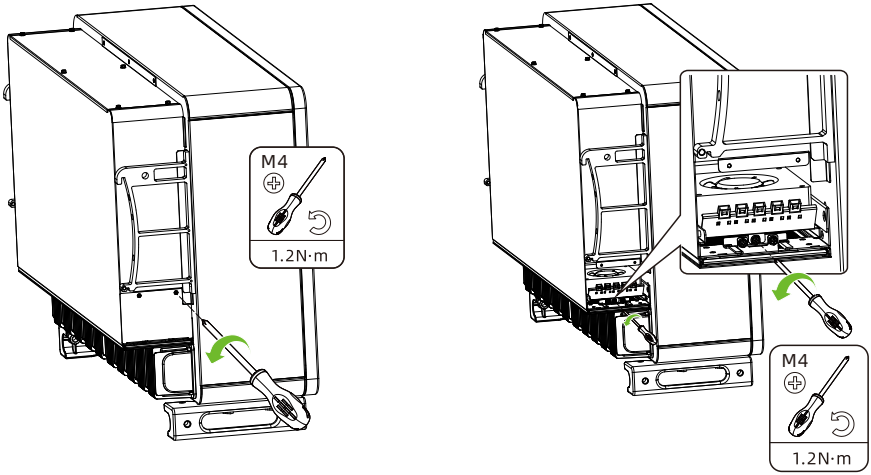

Fig 9.1 Replace Dust Filter 1

2) Slide out the dust filter, then use a Phillips screwdriver to remove its mounting screws (see diagram below).

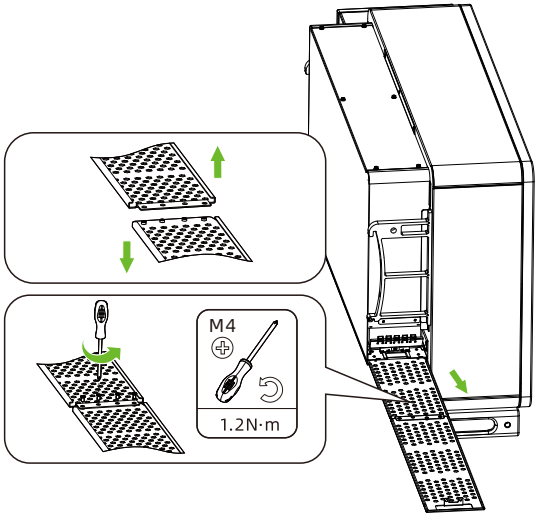

Fig 9.2 Replace Dust Filter 2

3) Remove the top dust filter using a Phillips screwdriver (see diagram below).

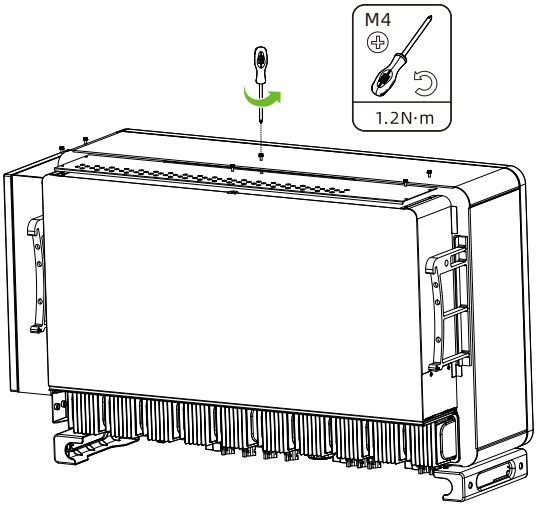

Fig 9.3 Replace the top Dust Filter

3> Replacing the Fan.

1) Use a Phillips screwdriver to remove the screws securing the fan mounting plate (see diagram below).

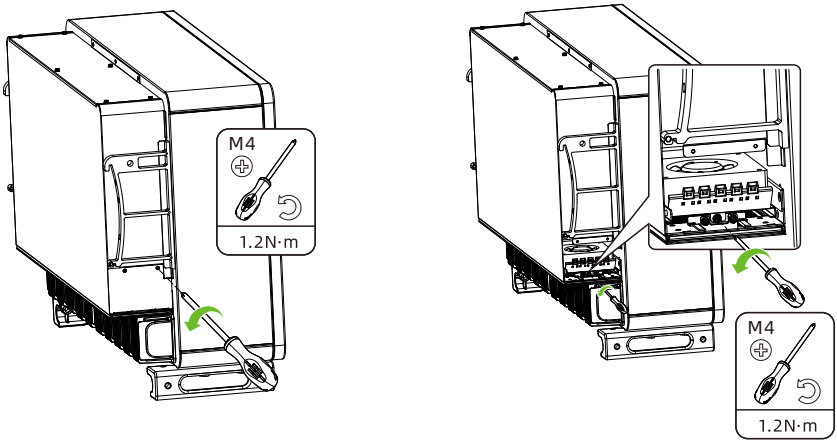

Fig 9.4 Replace the fan 1

2) Disconnect the fan connector, then unscrew the internal mounting screws of the fan bracket. Finally, remove the fan (see diagram below).

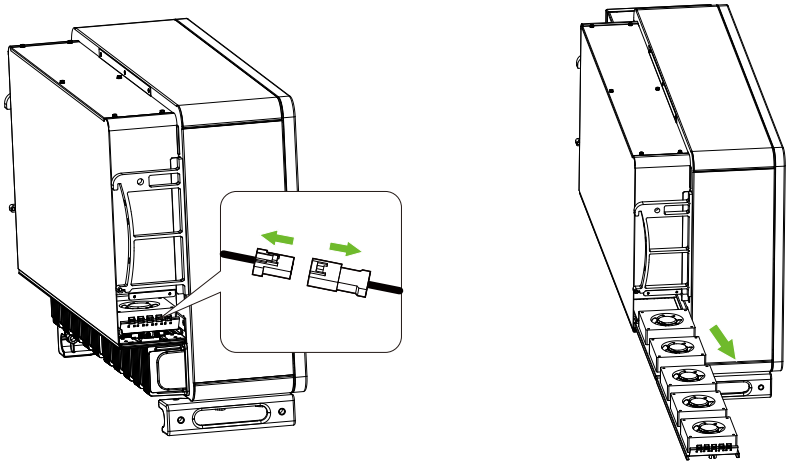

Fig 9.5 Replace the fan 2

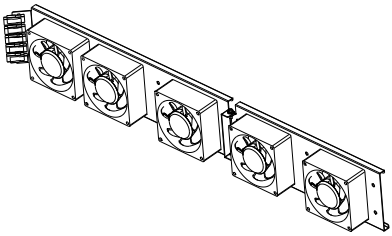

Fig 9.6 External fan view

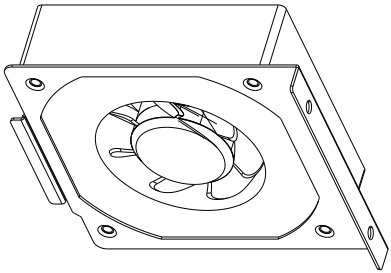

Fig 9.7 Internal fan view

Note: The MAX 150-180KTL3-X series inverter has 7 fans (2 internal fans and 5 external fans).

4> Clean the fan, fan guard and heat sink, or replace the fan

1) Clean the heat sink with an air pump; clean the fan and fan guard with a brush or cloth moistened with water.
2) If necessary, you can remove all fans and clean each fan separately.
3) Remove the fan to be replaced using a cross-head screwdriver, and install the new fan.
4) Bind the cables properly and fix them with a cable tie

5> Re-install the fan fixing plate and the inverter.

9.2 Troubleshooting

DANGER	• Only qualified and trained electrical technicians are allowed to perform electrical connections and all instructions specified in this manual should be observed. • If the inverter reports "PV Isolation low", do not touch the equipment as a ground fault might have occurred. • Beware of high voltages which can cause electric shocks.

9.2.1 Warnings

Warnings indicate the current status of the inverter, different from the faults and generally has no effect on the normal operation of the inverter. You can clear a warning by restarting the device, resetting or performing self-corrective measures. The warning codes are shown below:

Warning	Description	Suggestion
Warning200	PV string fault	1. Check if the PV panels are normal after shutdown. 2. If the error message persists, contact Growatt support.
Warning201	PV string/PID quick-connect terminals abnormal	1. Check the wiring of the string terminals after shutdown. 2. If the error message persists, contact Growatt support.
Warning202	DC SPD function abnormal	1. Check the DC SPD after shutdown. 2. If the error message persists, contact Growatt support.
Warning203	PV1 or PV2 short circuited	1. Check if PV1 or PV2 is short circuited. 2. If the error message persists, contact Growatt support.
Warning204	Dry contact function abnormal	1. Check the wiring of the dry contact after shutdown. 2. If the error message persists, contact Growatt support.
Warning205	PV Boost driver abnormal	1. Restart the inverter. 2. If the error message persists, contact Growatt support.
Warning206	AC SPD function abnormal	1. Check the AC SPD after shutdown. 2. If the error message persists, contact Growatt support.
Warning207	USB flash drive overloadprotection	1. Unplug the USB flash drive. 2. Plug in the USB flash drive again after shutdown. 3. If the error message persists, contact Growatt support.
Warning208	DC fuse blown	1. Check the fuse after shutdown. 2. If the error message persists, contact Growatt support.
Warning209	DC input voltage exceeds the upper threshold	1. Turn off the DC switch immediately and check the DC voltage. 2. If the DC voltage is within the specified range and the error message persists, contact Growatt support.

Warning	Description	Suggestion
Warning210	PV wiring abnormal	1. Check the polarity of the PV terminals. 2. If the error message persists, contact Growatt support.
Warning 219	PID function abnormal	1. Restart the inverter. 2. If the error message persists, contact Growatt support.
Warning 220	PV string disconnected	1. Check if the PV string is properly connected. 2. If the error message persists, contact Growatt support.
Warning 221	PV string current unbalanced	1. Check if the PV panels of the corresponding string are normal. 2. If the error message persists, contact Growatt support.
Warning 222	DC switch abnormality	1. Please check whether the positive and negative poles of the string are reversed. If there is a reverse connection, please adjust the polarity of the string. If it still exists, contact Growatt support; 2. If the DC switch is disconnected during operation, do not close it and contact Growatt support. 3. If there are obvious abnormalities of the equipment, disconnect the AC/DC switch, wait for the photovoltaic string current to drop below 0.01A, and remove the DC terminal,contact Growatt support.
Warning303	Off-grid mode, overload	1. Please reduce the load connected to the off-grid output terminal. 2. If the error message persists, contact Growatt support.
Warning304	CT disconnected	1. Check if the CT is properly connected. 2. If the error message persists, contact Growatt support.

Warning	Description	Suggestion
Warning305	CT is reversely connected	1. Check if the CT is reversely connected. 2. If the error message persists, contact Growatt support.
Warning306	The inverter failed to communicate with the CT	1. Check if the communication cable is properly connected. 2. If the error message persists, contact Growatt support.
Warning 307	CT pairing timed out	1. Check if the communication cable is properly connected. 2. If the error message persists, contact Growatt support.
Warning308	Meter disconnected	1. Check if the meter is properly connected. 2. If the error message persists, contact Growatt support.
Warning309	Meter wiring abnormal	1. Check if the L line and the N line of the meter are reversely connected. 2. If the error message persists, contact Growatt support.
Warning310	The voltage difference between the N line and the PE cable is abnormal	1. Check if the PE cable is reliably connected after shutdown. 2. If the error message persists, contact Growatt support.
Warning400	Fan failure	1. Check if the fan is properly connected after shutdown. 2. If the error message persists, contact Growatt support.
Warning401	Meter abnormal	1. Check if the meter is turned on. 2. If the meter is correctly connected to the inverter.
Warning402	Communication between the optimizer and the inverter is abnormal	1. Check if the optimizer is turned on. 2. If the optimizer is correctly connected to the inverter.
Warning403	PV string communication failure	1. Check if the wiring of the PV string after shutdown. 2. If the error message persists, contact Growatt support.

Warning	Description	Suggestion
Warning404	EEPROM abnormal	1. Restart the inverter. 2. If the error message persists, contact Growatt support.
Warning405	DSP and COM firmware version mismatch	1.Check the firmware version. 2. If the error message persists, contact Growatt support.
Warning406	Boost circuit malfunction	1. Restart the inverter. 2. If the error message persists, contact Growatt support.
Warning 407	Over-temperature	1. Restart the inverter. 2. If the error message persists, contact Growatt support.
Warning408	NTC temperature sensor is broken	1. Restart the inverter. 2. If the error message persists, contact Growatt support.
Warning409	Reactive power scheduling communication failure	1. Check if ShineMaster is turned on. 2. If the error message persists, contact Growatt support.
Warning410	Abnormal operation of the chip	1. Restart the inverter. 2. If the error message persists, contact Growatt support.
Warning411	Sync signal abnormal	1. Check if the sync cable is abnormal. 2. If the error message persists, contact Growatt support.
Warning412	Startup requirements for grid connection are not met	1. Check if the grid voltage is within the specified range and check if the grid-connection startup voltage configuration is correct. 2. Check if the PV voltage is within the specified range. 3. Restart the inverter. If the error message persists, contact Growatt support.

Note: If the problem persists, please contact Growatt support.

9.2.2 Error

Errors codes denote a possible equipment failure, fault or incorrect inverter setting or configuration. Any or all attempts to correct or clear a fault must be performed by qualified personnel.
Typically, the error code can be cleared once the cause or fault is removed.
For irreparable errors, please contact Growatt support.

Error	Description	Suggestion
Error 200	DC arc fault has been detected	1. After shutdown, check the connection of the PV string. 2. Restart the inverter. 3. If the error message persists, please contact Growatt support.
Error 201	An excessively high leakage current has been detected	1. Restart the inverter. 2. If the error message persists, please contact Growatt support.
Error 202	PV input voltage exceeds the upper threshold	1. Disconnect the DC switch immediately and check the voltage. 2. If the PV input voltage is within the permissible range and the error message persists, please contact Growatt support.
Error 203	PV panels have low insulation resistance	1. Check if the PV strings are properly grounded. 2. If the error message persists, please contact Growatt support.
Error 204	PV string reversely connected	1. After shutdown, check if the PV string is reversely connected to the inverter. 2. Restart the inverter. 3. If the error message persists, please contact Growatt support.
Error 300	Grid voltage is beyond the permissible range	1. Check the grid voltage. 2. If the grid voltage is within the permissible range and the error message persists, please contact Growatt support.
Error 301	AC terminals reversed	1. Check the connection of the AC output terminals. 2. If the error message persists, please contact Growatt support.

Error	Description	Suggestion
Error 302	No utility grid connected or utility grid power failure	1. After shutdown, check the AC wiring. 2. If the error message persists, please contact Growatt support.
Error 303	The voltage difference between the N line and the PE cable is abnormal	1. After shutdown, check if the ground cable is reliably connected. 2. If the error message persists, please contact Growatt support.
Error 304	Grid frequency is beyond the permissible range	1. Check the grid frequency and restart the inverter. 2. If the error message persists, please contact Growatt support.
Error 305	Overload	1. Check if the load exceeds the output power upper limit; if so, please reduce the load. 2. If the error message persists, please contact Growatt support.
Error 306	CT LN Reversed	1. Check if the CT is reversely connected. 2. If the error message persists, contact Growatt support.
Error 307	CT communication failure	1. Check if the communication cable is properly connected. 2. If the error message persists, contact Growatt support.
Error 308	CT and inverter pairing timed out	1. Re-pair the inverter and the CT. 2. If the error message persists, contact Growatt support.
Error 309	ROCOF abnormal	1. Check the grid frequency and restart the inverter. 2. If the error message persists, please contact Growatt support.
Error 310	PV negative grounding, protection for low Neutral-to-Ground (N-G) voltage	1. Check whether the N line on the inverter side with PV negative grounding is short-circuited with the ground cable and whether the output side is isolated with a transformer. 2. If the error message persists, please contact Growatt support.

Error	Description	Suggestion
Error 311	Export limitation fail-safe	1. After shutdown, check the connection of the CT and the meter. 2. If the error message persists, please contact Growatt support.
Error 400	DCI bias abnormal	1. Restart the inverter. 2. If the error message persists, contact Growatt support.
Error 401	High DC component in output voltage	1. Restart the inverter. 2. If the error message persists, contact Growatt support.
Error 402	High DC component in output current	1. Restart the inverter. 2. If the error message persists, contact Growatt support.
Error 403	Output current unbalanced	1. Check if the output current is balanced after shutdown. 2. If the error message persists, contact Growatt support.
Error 404	Bus voltage sampling abnormal	1. Restart the inverter. 2. If the error message persists, please contact Growatt support.
Error 405	Relay failed	1. Restart the inverter. 2. If the error message persists, please contact Growatt support.
Error 406	Initialization mode abnormal	1. Restart the inverter. 2. If the error message persists, please contact Growatt support.
Error 407	Auto-test failed	1. Restart the inverter. 2. If the error message persists, please contact Growatt support.
Error 408	Over-temperature	1. After shutdown, check the temperature of the inverter and restart the inverter after the temperature is within the acceptable range. 2. If the error message persists, please contact Growatt support.

Error	Description	Suggestion
Error 409	Bus voltage abnormal	1. Check whether the PV module string connections are secure and intact, and whether each string voltage is normal. Also check if the AC line voltage, phase voltage, and neutral-to-ground voltage are within normal ranges. 2. If all the above checks are normal, disconnect both the PV and AC power supplies, and immediately contact the equipment manufacturer's after-sales service department.
Error 410	Abnormal voltage across the flying capacitor	1. Restart the inverter. 2. If the error message persists, please contact Growatt support.
Error 411	Internal communication failure	1. Check the wiring of the communication board after shutdown. 2. If the error message persists, please contact Growatt support.
Error 412	Temperature sensor disconnected	1. Check if the temperature sensor module is properly connected. 2. If the error message persists, please contact Growatt support.
Error 413	IGBT drive fault	1. Restart the inverter. 2. If the error message persists, please contact Growatt support.
Error 414	EEPROM error	1. Restart the inverter. 2. If the error message persists, please contact Growatt support.
Error 415	Auxiliary power supply abnormal	1. Restart the inverter. 2. If the error message persists, please contact Growatt support.
Error 416	DC/AC overcurrent protection	1. Restart the inverter. 2. If the error message persists, please contact Growatt support.
Error 417	Communication protocol mismatch	1. Restart the inverter. 2. If the error message persists, please contact Growatt support.
Error 418	DSP and COM firmware version mismatch	1. Check the firmware version. 2. If the error message persists, please contact Growatt support.

Error	Description	Suggestion
Error 419	DSP software and hardware version mismatch	1. Check the firmware version. 2. If the error message persists, please contact Growatt support.
Error 420	GFCI module abnormal	1. Check the GFCI module after shutdown. 2. If the error message persists, please contact Growatt support.
Error 421	CPLD abnormal	1. Restart the inverter. 2. If the error message persists, please contact Growatt support.
Error 422	Redundancy sampling inconsistent	1. Restart the inverter. 2. If the error message persists, please contact Growatt support.
Error 423	PWM pass-through signal failure	1. Restart the inverter. 2. If the error message persists, please contact Growatt support.
Error 424	INV current waveform abnormal	1. Restart the inverter. 2. If the error message persists, please contact Growatt support.
Error 425	AFCI self-test failed	1. Restart the inverter. 2. If the error message persists, please contact Growatt support.
Error 426	PV current sampling abnormal	1. Restart the inverter. 2. If the error message persists, please contact Growatt support.
Error 427	AC current sampling abnormal	1. Restart the inverter. 2. If the error message persists, please contact Growatt support.
Error 428	BOOST short-circuited	Please contact Growatt support.
Error 429	BUS soft start failed	1. Restart the inverter. 2. If the error message persists, please contact Growatt support.
Error 431	Monitoring chip BOOT verification failed	1. Restart the inverter. 2. If the error message persists, please contact Growatt support.

Note: If the problem persists, please contact Growatt support.

9.3 DC Switch Reset/Close Operation

If you see alarms such as "String Reverse Connection", "String Reverse Current", or an internal inverter fault via the mobile APP interface or remote monitoring system, and the DC switch is in the "OFF" state, it can be determined that the inverter's DC switch has tripped automatically. In this case, fault troubleshooting needs to be performed according to the alarm handling recommendations. The DC switch can only be reset and closed for re-powering after the fault is resolved.

After the fault is resolved, please follow the steps below to re-power:
Step 1> Use the switch handle provided in the accessory bag to turn the inverter's "DC SWITCH" to the "ON" position. A click sound indicates the switch is fully closed.

Step 2>Observe the LED indicators. If the PV voltage indicator shows a steady green light and the AC voltage indicator shows a steady red light, close the AC switch between the inverter and the grid.

Step 3>Observe the LED indicators to check the inverter's operating status. If the inverter is operating normally, the alarm/fault indicator will not have a slow red flash and the power indicator will be steadily lit.

Fig 9.8 DC switch status

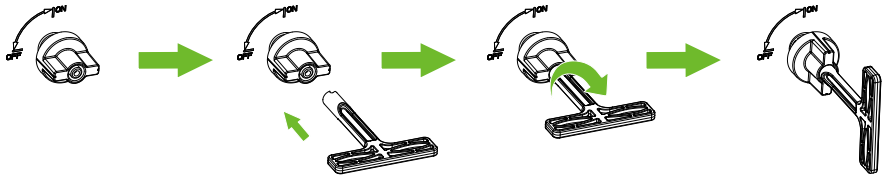

Fig 9.9 Diagram for DC switch reset

Precautions:
When a photovoltaic (PV) inverter experiences a fault that cannot be identified or resolved independently, a power-off operation must be carried out immediately to avoid safety risks or further equipment damage caused by improper operation.
Operation Requirements:
1>During the power-off procedure, both the PV switch (inverter DC input switch) and the AC switch (AC distribution switch) must be turned off simultaneously to ensure the inverter is completely de-energized.
2>After the power-off operation, promptly report the fault through the official after-sales service channels specified in the user manual, and wait for handling by qualified service personnel.

Safety Warnings:
1>Please wear appropriate insulated protective equipment during operation to avoid the risk of electric shock.
2>Failure to turn off both the PV and AC switches may result in the equipment remaining energized, leading to electric shock hazards or further expansion of the equipment fault.

Specifications 10

Specifications \ Model	MAX 150KTL3-X LV	MAX 180KTL3-X MV
Input Data(DC)		
Max.recommended PV power(for module STC)	225kW	270kW
Max.DC voltage	1100V	
Start voltage	195V	
Nominal voltage	600V	720V
MPP voltage range	180V-1000V	
Full-load MPPT voltage range	600V-850V	
No.of MPP trackers	10	
No.of PV strings per MPPT	6*2+4*3	
Max.input current per MPPT	45A	
Max.short-circuit current per MPPT	56.5A	
DC overvoltage category	Category II	
Output Data(AC)		
AC nominal power	150kW	180kW
Max.AC apparent power	165kVA	198kVA
Nominal AC voltage/range	230V/400V 340-440VAC	277V/480V 408-528VAC
AC grid frequency/range	50/60Hz 45-55Hz/55-65Hz	
Max.output current	250.7A@380V 238.2A@400V	238.2A
Power factor (@nominal)	>0.99	
Max.output facult current/duration	400A/30μs	
Adjustable power factor	0.8leading ...0.8lagging	
THDi	<3%	
AC grid connection type	3W/N/PE	3W+PE
AC overvoltage category	Category III	

Model / Specifications	MAX 150KTL3-X LV	MAX 180KTL3-X MV
Efficiency		
Max.efficiency	98.80%	99.00%
Euro-eta	98.40%	98.50%
Protection devices		
DC reverse-polarity protection	Yes	
DC switch	Yes	
DC Surge protection	Type II	
Insulation resistance monitoring	Yes	
AC surge protection	Yes	
Grid monitoring	Yes	
Anti-islanding protection	Yes	
Residual-current monitoring unit	Yes	
String monitoring	Yes	
Anti-PID function	Optional	
AFCI protection	Optional	
General data		
Dimensions (W /H / D) in mm	1075*640*370mm	
Max. inrush current/duration	20KA/tr:8μs,tf:20μs	
Weight	93kg	
Operating temperature range	-30℃- +60℃	
Altitude	4000m	
Internal consumption at	<1W(Note1)	
Topology	Transformerless	
Cooling	Smart air cooling	
Protection degree	IP66	

Specifications \ Model	MAX 150KTL3-X LV	MAX180KTL3-X MV
Relative humidity	0~100%	
DC connection	H4/MC4(Optional)	
AC connection	OT/DT terminal	
Interfaces		
Display	LED/WIFI+APP	
RS485/USB	Yes	
PLC/GPRS/4G	Optional	
Warrant:5 /10 years	Optional	
Certificates and approvals		
Grid regulation	AS/NZS 4777.2,CEI 0-21,CEI 0-16,VDE-AR-N 4105, DIN V VDE V 0126-1-1,UTE C 15-712-1,EN 50438, IEC 60068,IEC 61683,IEC 62116,IEC 61727, MEA,PEA,DRRG/DEWA:2016,BDEW,G59/3	
EMC	EN61000-6-2,EN61000-6-4	
Safety	IEC/EN62109-1,IEC/EN62109-2	
Note1: If with AC power supply function, self-consumption at night is less than 15W.		

11 Decommissioning

Please handle the inverters that will not be put into operation properly, following the steps below:

1> Disconnect the external AC circuit breaker and prevent accidental reconnection.
2> Turn the DC switch to the "OFF" position.
3> Wait at least 5 minutes until the internal capacitor is fully discharged.
4> Remove the AC connection.
5> Remove the DC connection.
6> Remove the inverter from the wall.
7> Handle the inverter.

11.1 Disposing of the inverter

	Do not dispose of the product together with the household waste, but in accordance with the disposal regulations for electronic waste applicable at the installation site. Ensure that the old unit and, where applicable, any accessories are disposed of in a proper manner.

12 Warranty

Please refer to the Warranty Card.

Contact 13

If you have technical problems concerning our products, contact your installer or Growatt.To provide you with the necessary support, please have the following information ready:

1> Inverter model
2> Serial number of inverter
3> Error code of inverter
4> LED status of inverter
5> DC input voltage of inverter (Modules information)
6> Inverter communication method

Shenzhen Growatt New Energy Co., Ltd.

4-13/F, Building A, Sino-German (Europe) Industrial Park,
Hangcheng Blvd, Bao'an District, Shenzhen, China

E service@growatt.com
W en.growatt.com

For local customer support, please visit https://en.growatt.com/support/contact

Download Manual

Growatt New Energy

Shenzhen Growatt New Energy Co., Ltd.

4-13/F, Building A, Sino-German (Europe) Industrial Park,
Hangcheng Blvd, Bao'an District, Shenzhen, China

E service@growatt.com

W en.growatt.com

For local customer support, please visit https://en.growatt.com/support/contact

GR-UM-310-A-02 (PN:044.0127502)